

JVET-K0308:
CE12: HDR In-loop Reshaping (CE12-5, 12-6, 12-7 and 12-8)

July. 2018

Dolby Laboratories

Outline

- Introduction
- Algorithm Description
- Syntax
- Simulation Results
- Conclusion

Introduction

- In loop reshaper has been proposed in CfP response J0015 for HDR coding. Main aspects include:
  - In-loop Luma sample mapping via a pair of FwdLUT and InvLUT
  - Luma based Chroma QP adjustment
  - Loop filter application in reshaped domain or original domain
  - Region-based reshaping
- HDR CE12-5/6/7/8 are designed to test these aspects individually
  - CE12-5: in-loop reshaper without Luma based Chroma QP adjustment
  - CE12-6: in-loop reshaper with Luma based Chroma QP adjustment
  - CE12-7: loop filter application
  - CE12-8: region-based in-loop reshaper

Algorithm: In-loop Reshaper

- Intra:
  - Encoder: Forward reshaping, intra coding in reshaped picture, inverse reshaping reconstructed picture before stored in DPB buffer.
  - Decoder: Inverse reshaping reconstructed picture before stored in DPB buffer

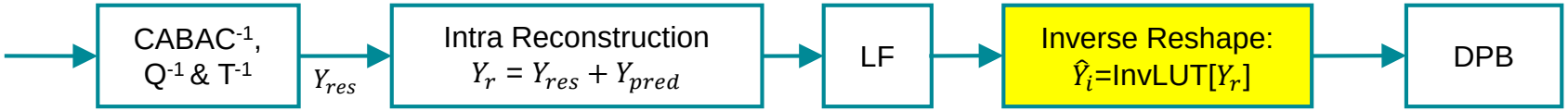

- Inter:
  - Encoder: Modify how residue is generated: $Y_{res} = FwdLUT[Y_i] - FwdLUT[Y_{pred}]$
  - Decoder: Modify how reconstructed sample is generated: $Y_r = InvLUT[Y_{res} + FwdLUT[Y_{pred}]]$

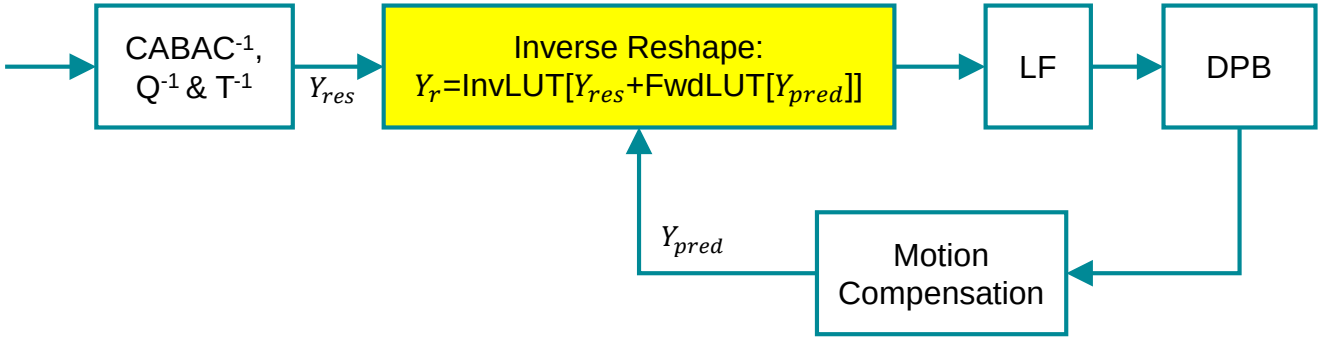

Algorithm: Static LUT Derivation from Anchor wPSNR

- In HDR Anchor:
  - Luma dQP is calculated as dQP(Y) = max(-3, min(6, 0.015*Y - 7.5))
  - In wPSNR calculation, the Luma based weight for **squared** distortion is calculated as **W_SSE(Y) = pow(2.0, dQP(Y)/3.0);**
- A static Luma reshaping LUT is derived from wPSNR and is used for CE12-5/6/7/8 tests
  - compute the slope of the reshaping curve, which is also the luma sample importance (weight) **slope[Y] = sqrt(W_SSE(Y)) = 2^(dQP(Y)/6);**
  - If signal is in standard range, slope(Y) = 0 for [0 64) and (940 1023];
  - Integral slope to get reshaping curve F(Y): F[Y+1] = F[Y] + slope[Y];
  - normalize F(Y): FwdLUT[Y] = clip3(0, 1023, round(F[Y]*maxY/F[maxY]));

Algorithm: Luma-based Chroma Adjustment

- To compensate for the Luma signal interaction with the Chroma signal, an additional Chroma QP Offset is used to adjust Chroma quantization parameters for Chroma component coding.
  - $cQPO = -6 * log2(FwdLUT'[\overline{Y_{CU}}]) = -dQP[\overline{Y_{CU}}]$
    - $\overline{Y_{CU}}$ is average **predicted** Luma value in CU
  - chromaQP = QP_luma + chromaQPOffset + $cQPO$;
- Luma-based Chroma QP Adjustment may cause decoder hardware pipeline issue: Chroma inverse Q/T cannot start until Luma predicted value is available
  - To resolve the issue, Chroma adjustment can be implemented by scaling the Chroma residue signal in each TU.
  - cScale = $FwdLUT'[\overline{Y_{CU}}]$
  - Encoder side: cResScale = cRes * cScale; cResScale is the actual residue signal to be transformed and quantized.
  - Decoder side: cRes = cResScale/cScale.
- CE12.6 includes two sub-tests
  - CE12-6.1: Luma based Chroma QP adjustment
  - CE12-6.2: Luma based Chroma residue scaling

Algorithm: Loop Filter Application

- CE12-7 is designed to evaluate performance for loop filter application.
- Loop filtering can be applied in either the original domain or the reshaped domain.
  - Filter parameters are estimated in the domain of application during encoding

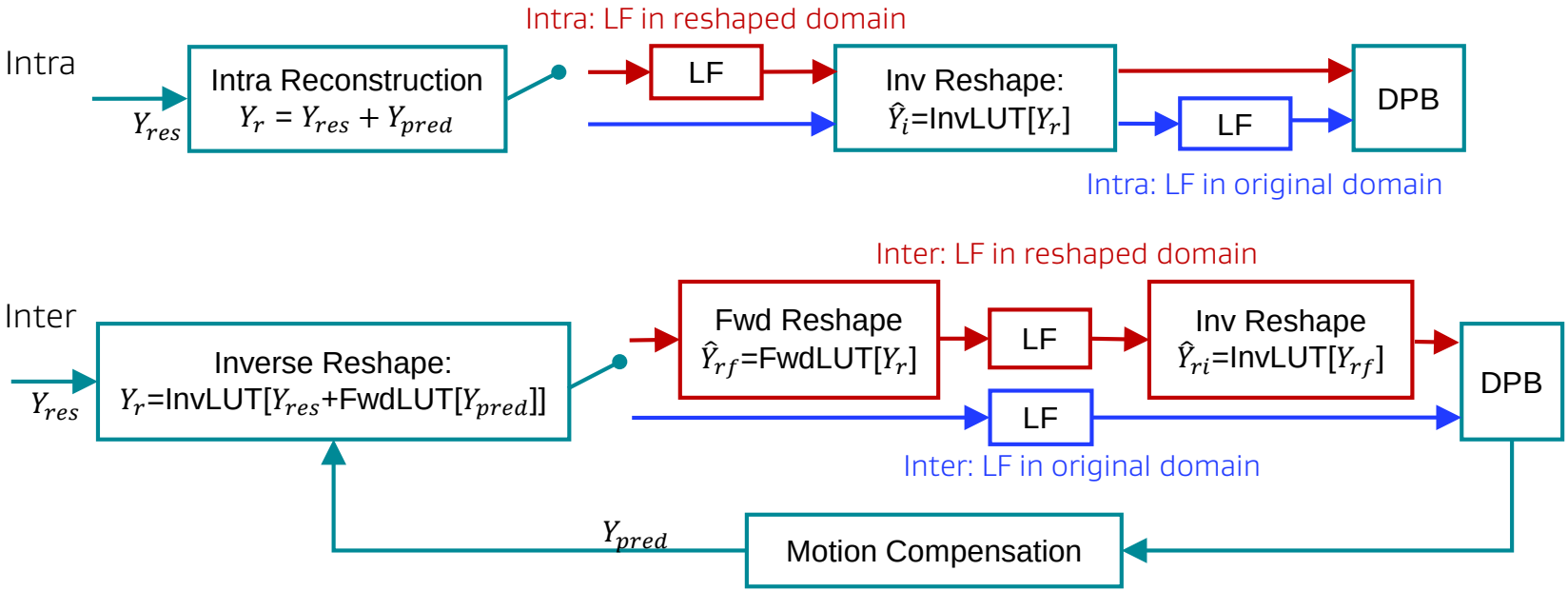

Algorithm: Loop Filter Application

- Three sub-tests is designed in CE12-7 to test different combinations of LF application on intra/inter slices

	Intra Slice	Inter Slice
CE12-7.1	Original domain	Original domain
CE12-7.2	Reshaped domain	Original domain
CE12-7.3	Reshaped domain	Reshaped domain

- Complexity considerations
  - For intra slice, LF application in reshaped domain or original domain have same complexity
  - For inter slice, LF application in reshaped domain incurs higher complexity than LF application in original domain (a pair of Fwd and Inv LUT mapping is required).
    - To get better performance/complexity trade-off, we constrain LF application in reshaped domain when TemporalId<= TemporalId_Thr.

Algorithm: Region-based Reshaping

- In-loop reshaping architecture allows CTU adaptation (region-based reshaping)
- CE12-8 is designed to illustrate the feature of CTU adaption with a heuristic algorithm to determine CTU on/off
  - For fair comparison, Anchor is modified accordingly to use same rule for LumaDQP CTU on/off
  - CTU average luma value Yavg is calculated and compared with TH. If Yavg < TH, enable reshaping for CTU (in test) or enable LumaDQP for CTU (in Anchor)
  - CTU adaptation is implemented for inter slices only

Syntax

SPS()	Descriptor
……	
sps_reshaper_enable_flag /*1: reshaping on, else off */	u(1)
if (sps_reshaper_enable_flag) {	
sps_reshaper_signal_type /* 0:SDR, 1:PQ*/	u(2)
sps_reshaper_ILF_opt /* loop filter in which domain: 2 bits inter/intra */	u(2)
if (sps_reshaper_ILF_opt == 3)	
sps_reshaper_ILF_Tid	u(3)
sps_reshaper_chromaAdj /* 1: chromaDQP; 2: chroma scaling/	u(2)
sps_reshaper_model_present_flag /*1: present*/	u(1)
if (sps_reshaper_model_present_flag)	
sps_reshaper_model ()	
}	

slice_header()	Descriptor
……	
slice_reshaper_model_present_flag	u(1)
if (slice_reshaper_model_present_flag)	
slice_reshaper_model ( )	
slice_reshaper_enable_flag	u(1)
if (slice_reshaper_enable_flag) {	
reshaper_CTU_control_flag	u(1)
}	
……	

coding_tree_unit()	Descriptor
……	
if (reshape_CTU_control_flag) {	
reshaper_CTU_flag	ae(v)
}	
……	

Simulation: CE12-5/6/7/8 Implementation

- All the four CEs use same software, same build/executable for testing
  - Software base: BMS1.1 with JEM_TOOLS=0, WCG_EXT=1
  - New encoder parameters are introduced and CEs set different parameter values:
    - LumaReshapeEnable=1 # luma reshaping. 0: disable 1:enable
    - ReshapeSignalType=1 # 0: SDR 1:HDR-PQ
    - ChromaAdj # luma based chroma adjustment. 0: disable 1:chromaQP offset 2:chroma residue scaling
    - ILFOPT # YX: 2 bits. 0: loop filter in non-reshaped domain; 1: in reshaped domain. X:intra, Y:Inter
    - CTUAdp # CTU adaptation 0: disable, 1: enable

	ChromaAdj	ILFOPT	CTUAdp
CE12-5	0	3 (RA), 1 (AI)	0
CE12-6.1	1	3 (RA), 1 (AI)	0
CE12-6.2	2	3 (RA), 1 (AI)	0
CE12-7.1	1	0 (RA and AI)	0
CE12-7.2	1	1 (RA and AI)	0
CE12-7.3	1	3 (RA)	0
CE12-8	1	3 (RA)	1

Simulation: Test Setting

- Fixed QP simulations under CTC
- Encoding time is measured using encoding logs reported by cluster. For RA, parallel encoding is used.
- Decoding time is measured using one single, stand-alone windows 64-bit PC, with Intel (R) Core™ i7-3930K CPU @3.20GHz, 64G RAM and SSD SATA3.0 hard disk.

Simulation Results: CE12-5

CE12-5	AI: BD-rate					RA: BD-rate				
	DE100	PSNRL100	wPsnrY	wPsnrU	wPsnrV	DE100	PSNRL100	wPsnrY	wPsnrU	wPsnrV
Market	16.9%	-3.9%	-3.3%	25.9%	30.2%	17.0%	-2.8%	-2.4%	25.0%	32.7%
SunRise	25.6%	-3.1%	-2.5%	23.3%	32.9%	11.9%	-1.7%	-1.2%	22.6%	21.5%
ShowGirl2	-4.4%	-1.3%	-0.6%	-6.4%	-17.3%	-2.1%	-0.9%	-0.4%	-0.8%	-10.6%
BalloonFestival	6.7%	-4.1%	-3.1%	4.1%	5.3%	7.4%	-3.8%	-2.9%	4.9%	5.0%
Hurdles	38.9%	-4.6%	-4.1%	53.0%	69.9%	26.9%	-4.8%	-4.1%	41.6%	50.0%
Starting	20.6%	-4.9%	-4.2%	17.6%	24.7%	23.0%	-4.7%	-3.8%	18.5%	21.6%
Cosmos1	-8.7%	2.4%	3.3%	-31.3%	-54.9%	-7.2%	0.5%	0.5%	-27.7%	-47.9%
Average HDR-B	13.7%	-2.8%	-2.1%	12.3%	13.0%	11.0%	-2.6%	-2.0%	12.0%	10.3%
Enc Time[%]	101%					104%				
Dec Time[%]	104%					108%				

Luma-based chroma adjustment disabled;
Loop filter application in reshaped domain (intra & inter);

Simulation Results: CE12-6.1

CE12-6.1	AI: BD-rate					RA: BD-rate				
	DE100	PSNRL100	wPsnrY	wPsnrU	wPsnrV	DE100	PSNRL100	wPsnrY	wPsnrU	wPsnrV
Market	0.7%	-3.5%	-2.9%	-1.0%	-4.0%	1.2%	-2.5%	-2.1%	0.4%	1.9%
SunRise	-0.2%	-2.2%	-1.5%	-3.0%	-7.1%	-2.2%	-1.2%	-0.5%	-1.0%	-4.3%
ShowGirl2	-3.6%	-2.1%	-1.6%	-2.9%	-8.3%	-3.4%	-1.6%	-1.2%	-2.7%	-4.0%
BalloonFestival	-0.4%	-3.6%	-2.4%	-2.9%	-3.8%	-0.4%	-3.5%	-2.5%	-2.0%	-2.6%
Hurdles	-1.7%	-2.4%	-1.8%	-0.9%	-2.1%	-1.3%	-3.8%	-3.1%	-0.3%	5.0%
Starting	-2.3%	-3.0%	-2.2%	-2.6%	-2.5%	-1.8%	-3.3%	-2.3%	-1.4%	2.1%
Cosmos1	-3.1%	-2.5%	-1.8%	0.1%	-5.6%	-1.4%	-2.1%	-2.2%	7.0%	1.4%
Average HDR-B	-1.5%	-2.8%	-2.0%	-1.9%	-4.8%	-1.3%	-2.6%	-2.0%	0.0%	-0.1%
Enc Time[%]	105%					104%				
Dec Time[%]	105%					108%				

Luma-based chroma adjustment enabled (method: chroma QP offset);
Loop filter application in reshaped domain (intra & inter);

Simulation Results: CE12-6.2

CE12-6.2	AI: BD-rate					RA: BD-rate				
	DE100	PSNRL100	wPsnrY	wPsnrU	wPsnrV	DE100	PSNRL100	wPsnrY	wPsnrU	wPsnrV
Market	-0.8%	-3.5%	-3.0%	4.1%	4.6%	0.9%	-2.6%	-2.2%	6.8%	11.9%
SunRise	16.8%	-1.6%	-0.9%	2.5%	12.0%	14.8%	-0.7%	0.0%	11.5%	15.1%
ShowGirl2	-4.7%	-1.7%	-1.3%	-2.9%	-9.4%	-3.7%	-1.5%	-1.1%	-2.4%	-3.6%
BalloonFestival	4.9%	-4.1%	-3.1%	3.1%	7.0%	9.0%	-3.8%	-3.0%	5.6%	9.7%
Hurdles	-4.7%	-1.9%	-1.3%	-1.3%	-4.6%	-3.3%	-3.6%	-2.9%	0.6%	5.5%
Starting	-7.3%	-3.5%	-2.7%	1.6%	6.4%	-5.1%	-3.7%	-2.7%	3.6%	10.6%
Cosmos1	-0.5%	-3.0%	-2.2%	6.5%	2.2%	1.4%	-2.4%	-2.4%	15.9%	13.2%
Average HDR-B	0.5%	-2.8%	-2.1%	2.0%	2.6%	2.0%	-2.6%	-2.0%	5.9%	8.9%
Enc Time[%]	106%					104%				
Dec Time[%]	106%					108%				

Luma-based chroma adjustment enabled (method: chroma residue scaling);
Loop filter application in reshaped domain (intra & inter);

Simulation Results: CE12-7.1

CE12-7.1	AI: BD-rate					RA: BD-rate				
	DE100	PSNRL100	wPsnrY	wPsnrU	wPsnrV	DE100	PSNRL100	wPsnrY	wPsnrU	wPsnrV
Market	1.1%	-2.1%	-1.8%	-1.0%	-4.0%	1.9%	-0.7%	-0.8%	0.8%	2.2%
SunRise	-0.3%	-1.5%	-1.0%	-3.0%	-7.0%	-2.3%	-0.6%	-0.4%	-0.9%	-4.3%
ShowGirl2	-3.4%	-1.8%	-1.3%	-2.9%	-7.8%	-3.3%	-1.4%	-0.9%	-2.2%	-3.4%
BalloonFestival	-0.3%	-3.4%	-2.1%	-2.9%	-3.8%	-0.4%	-3.1%	-2.1%	-2.2%	-2.8%
Hurdles	-1.4%	-0.8%	-0.3%	-0.9%	-2.2%	-0.7%	-2.0%	-1.8%	-0.6%	4.5%
Starting	-2.0%	-2.2%	-1.5%	-2.6%	-2.5%	-1.6%	-2.2%	-1.5%	-1.4%	2.0%
Cosmos1	-3.7%	-2.8%	-2.5%	0.2%	-5.5%	-1.3%	-2.0%	-2.0%	7.3%	1.6%
Average HDR-B	-1.4%	-2.1%	-1.5%	-1.9%	-4.7%	-1.1%	-1.7%	-1.3%	0.1%	0.0%
Enc Time[%]	106%					103%				
Dec Time[%]	105%					106%				

Luma-based chroma adjustment enabled (method: chroma QP offset);
Loop filter application in original domain (intra & inter);

Simulation Results: CE12-7.2

	AI: BD-rate					RA: BD-rate				
CE12-7.2	DE100	PSNRL100	wPsnrY	wPsnrU	wPsnrV	DE100	PSNRL100	wPsnrY	wPsnrU	wPsnrV
Market	0.7%	-3.5%	-2.9%	-1.0%	-4.0%	1.3%	-2.0%	-1.7%	0.5%	1.9%
SunRise	-0.2%	-2.2%	-1.5%	-3.0%	-7.1%	-2.4%	-1.3%	-0.7%	-1.1%	-4.4%
ShowGirl2	-3.6%	-2.1%	-1.6%	-2.9%	-8.3%	-3.7%	-1.5%	-1.1%	-2.8%	-3.7%
BalloonFestival	-0.4%	-3.6%	-2.4%	-2.9%	-3.8%	-0.4%	-3.4%	-2.3%	-2.0%	-2.7%
Hurdles	-1.7%	-2.4%	-1.8%	-0.9%	-2.1%	-1.2%	-3.2%	-2.6%	-0.5%	4.8%
Starting	-2.3%	-3.0%	-2.2%	-2.6%	-2.5%	-1.8%	-3.0%	-2.0%	-1.4%	1.9%
Cosmos1	-3.1%	-2.5%	-1.8%	0.1%	-5.6%	-1.5%	-2.1%	-2.0%	7.0%	1.2%
Average HDR-B	-1.5%	-2.8%	-2.0%	-1.9%	-4.8%	-1.4%	-2.4%	-1.8%	-0.1%	-0.1%
Enc Time[%]	105%					104%				
Dec Time[%]	105%					106%				

Luma-based chroma adjustment enabled (method: chroma QP offset);
Loop filter application in reshaped domain for intra slices and in original domain for inter slices;

Simulation Results: CE12-7.3

CE12-7.3	RA: BD-rate				
	DE100	PSNRL100	wPsnrY	wPsnrU	wPsnrV
Market	1.2%	-2.5%	-2.1%	0.4%	1.9%
SunRise	-2.2%	-1.2%	-0.5%	-1.0%	-4.3%
ShowGirl2	-3.4%	-1.6%	-1.2%	-2.7%	-4.0%
BalloonFestival	-0.4%	-3.5%	-2.5%	-2.0%	-2.6%
Hurdles	-1.3%	-3.8%	-3.1%	-0.3%	5.0%
Starting	-1.8%	-3.3%	-2.3%	-1.4%	2.1%
Cosmos1	-1.4%	-2.1%	-2.2%	7.0%	1.4%
Average HDR-B	-1.3%	-2.6%	-2.0%	0.0%	-0.1%
Enc Time[%]	104%				
Dec Time[%]	108%				

No AI test for this setting since no Inter slices coding under AI

Luma-based chroma adjustment enabled (method: chroma QP offset);
Loop filter application in reshaped domain (intra &inter);

Simulation Results: CE12-8

CE12-8	RA: BD-rate				
	DE100	PSNRL100	wPsnrY	wPsnrU	wPsnrV
Market	1.2%	-2.3%	-1.9%	0.6%	2.2%
SunRise	-1.9%	-1.0%	-0.3%	-0.9%	-3.9%
ShowGirl2	-3.7%	-0.8%	-0.5%	-2.6%	-4.8%
BalloonFestival	-0.3%	-3.5%	-2.5%	-2.0%	-2.5%
Hurdles	-1.0%	-3.7%	-3.0%	-0.3%	5.2%
Starting	-1.3%	-2.2%	-1.7%	-1.1%	2.4%
Cosmos1	-1.5%	-2.1%	-2.2%	6.7%	0.9%
Average HDR-B	-1.2%	-2.2%	-1.7%	0.1%	-0.1%
Enc Time[%]	103%				
Dec Time[%]	103%				

No AI test for this setting since CTU Adaption is implemented on inter slice only

Luma-based chroma adjustment enabled (method: chroma QP offset);
Loop filter application in reshaped domain (intra & inter);
CTU Adaption is enabled for both Anchor and Test based on same CTU decision.

Simulation Results: Summary

AI	DE100	PSNRL100	wPsnrY	wPsnrU	wPsnrV	Enc time	Dec time
CE12-5	13.70%	-2.80%	-2.10%	12.30%	13.00%	101%	104%
CE12-6.1	-1.50%	-2.80%	-2.00%	-1.90%	-4.80%	105%	105%
CE12-6.2	0.50%	-2.80%	-2.10%	2.00%	2.60%	106%	106%
CE12-7.1	-1.40%	-2.10%	-1.50%	-1.90%	-4.70%	106%	106%
CE12-7.2	-1.50%	-2.80%	-2.00%	-1.90%	-4.80%	105%	105%

RA	DE100	PSNRL100	wPsnrY	wPsnrU	wPsnrV	Enc time	Dec time
CE12-5	11.00%	-2.60%	-2.00%	12.00%	10.30%	104%	108%
CE12-6.1	-1.30%	-2.60%	-2.00%	0.00%	-0.10%	104%	108%
CE12-6.2	2.00%	-2.60%	-2.00%	5.90%	8.90%	104%	108%
CE12-7.1	-1.10%	-1.70%	-1.30%	0.10%	0.00%	103%	106%
CE12-7.2	-1.40%	-2.40%	-1.80%	-0.10%	-0.10%	104%	106%
CE12-7.3	-1.30%	-2.60%	-2.00%	0.00%	-0.10%	104%	108%

CE6.1 setting provides best performance/complexity trade-off therefore is the recommended setting:

- Enable Luma Reshaping;
- Enable Luma-based Chroma Adjustment using Chroma QP Offset;
- Enable Loop Filter Application in reshaped domain for both intra and inter slices;

CE6.2 is hardware friendly implementation of CE6.1

Complexity Discussion

- The major computational complexity of in-loop reshaping is the mapping for Luma samples using the pair of FwdLUT and InvLUT.
  - The pair of reshaping LUTs are implemented using 2-byte (10-bit), 1024 entry integer arrays. All the related operations are performed with fixed point arithmetic at the decoder side.
  - The in-loop reshaper performs Luma sample mapping in-place, meaning no extra storage buffer is needed for Luma samples.
  - The complexity of in-loop reshaping and its components is mainly determined by picture resolution and will not change if decoder complexity increases due to more complex coding tools are enabled (e.g. BMS coding tools or other JEM coding tools).
- For recommended setting, the decoding running time increase over VTM1.0 is under 10% (about 8%).
  - For class B (HD sequences) RA, the decoding complexity of VTM1.0 is 76% over HM16.18 and the decoding complexity of BMS1.0 is 278% over VTM1.0.
  - Therefore, 10% decoding complexity over VTM1.0 is projected to 7% over HM16.18 and 3% over BMS1.0.

Conclusion

- CE12-5, 12-6, 12-7 and 12-8 are designed to test all aspects of in-loop reshaper:
  - Luma level pixel mapping
  - Luma based Chroma adjustment
  - In loop filter application in reshaped domain or original domain
  - Region based reshaping
- The recommended setting (luma-level pixel mapping, luma-based chroma QP Offset, and applying loop-filter in reshaped domain for both intra and inter) shows that more than 2% gain for wPsnrY/PSNRL100, and no loss for chroma metrics.
- In-loop reshaping can improve SDR video coding performance: see JVET-K309.
- It is recommended that in-loop reshaping is a good candidate for VVC coding tool.

Acknowledgement

- We would like to thank Qualcomm, Sharp and Technicolor for crosschecking our CE results.

JVET-K0308:
CE12: HDR In-loop Reshaping (CE12-5, 12-6, 12-7 and 12-8)

July. 2018

Dolby Laboratories