MEDIATEK

CE9-related: MV prediction modification for decoder-side MV derivation tools

Tzu-Der (Peter) Chuang, Ching-Yeh Chen, Yu-Wen Huang, Shawmin Lei



Presented by Tzu-Der (Peter) Chuang
11th JVET Meeting in Ljubljana
10–18 July 2018

Overall Summary

- Decoder-side motion vector derivation (DMVD) tools can cause serious degradation of processing throughput in hardware decoders
- Propose a MV prediction modification for improving the processing throughput
  - If the block of the referenced MV is within the current CTU row, the unrefined MV is used
  - If the block of the referenced MV is above the current CTU row or in the temporal collocated picture, the refined MV is used
  - Refined MVs are used in overlapped block motion compensation (OBMC) and deblocking

Method	VTM			
	Y	U	V	Y-Preserved
DMVR + OMBC	-3.60%	-4.40%	-4.58%	
DMVR + OMBC + Proposed	-2.59%	-3.57%	-3.66%	72%
DMVR + CE9.2.1 + OMBC	-7.03%	-6.94%	-7.24%	
DMVR + CE9.2.1 + OMBC + Proposed	-5.81%	-5.96%	-6.17%	83%

Pipelined Hardware Video Decoder

- Reference pictures are usually stored in external off-chip DRAM.
- Motion compensation (MC) takes a lot of clock cycles and long latency to acquire reference picture samples.
- Pre-fetching reference picture samples is applied to solve the long MC latency issue.

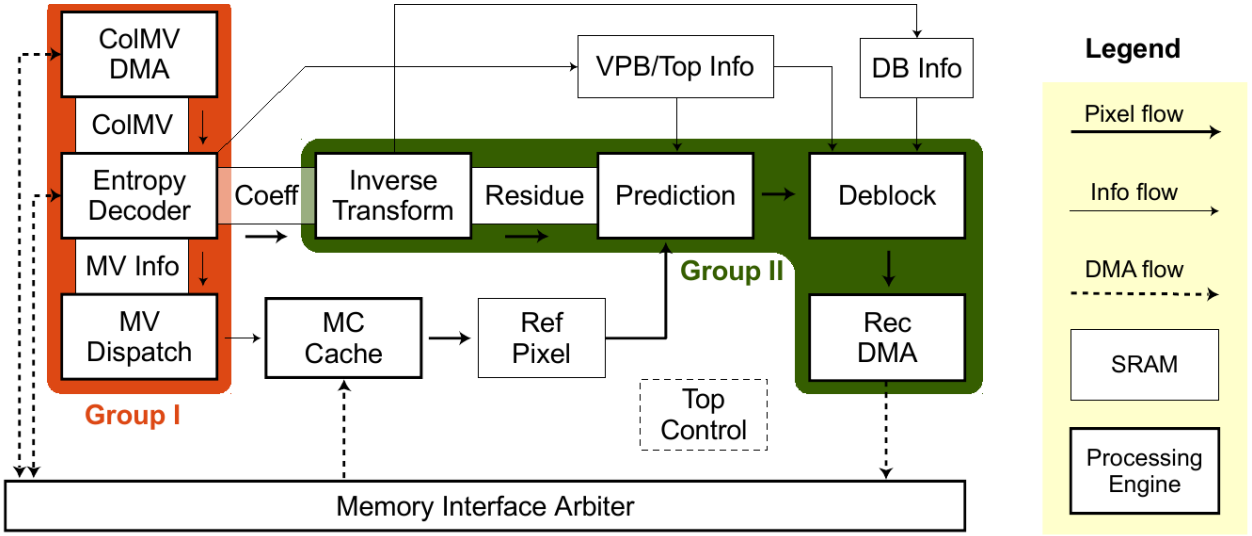

C.-T. Huang, M. Tikekar, C. Juvekar, V. Sze, A. Chandrakasan (MIT), "A 249MPixel/s HEVC video-decoder chip for Quad Full HD applications," *Digest of Technical Papers IEEE International Solid-State Circuits Conference (ISSCC),* pp. 162-163, Feb. 2013

Data Prefetching

- MVs of one pipelined data unit (DU; e.g., a block with size equal to Max TB size) are reconstructed after parsing related MV information
- The reference picture samples are pre-fetched from DRAM to a local on-chip memory before the DU enters the next pipeline stage.

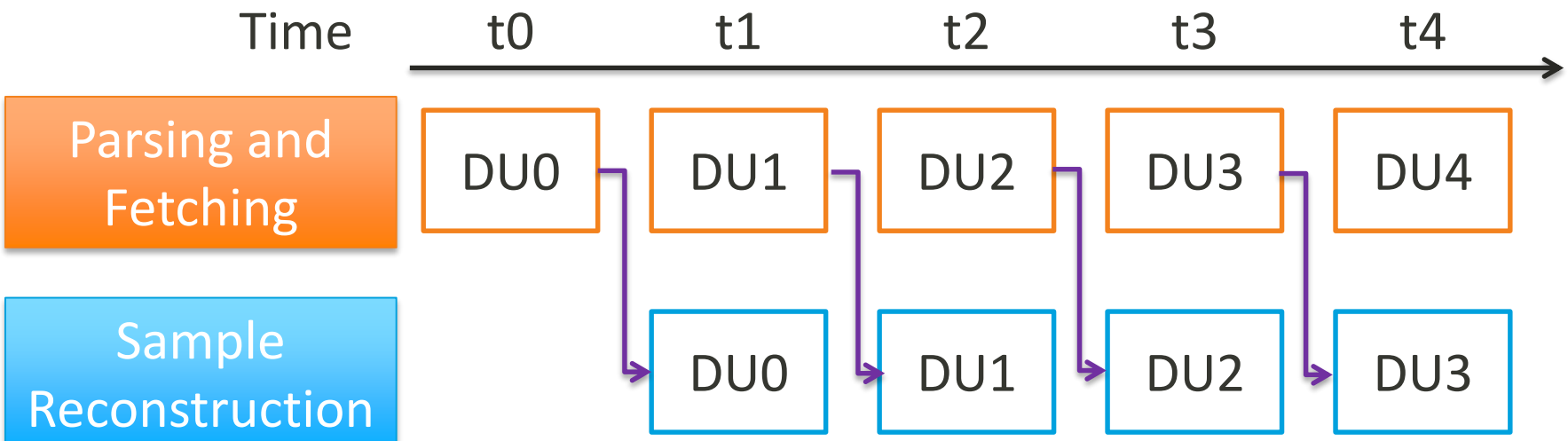

Data Prefetching

- When any DMVD tool (e.g., DMVR) is applied, the MV might be changed in sample reconstruction stage and affects the MV reconstruction of the next DU.
- Fails to apply the mechanism of pre-fetching reference picture samples
- Decoding throughput is significantly decreased.

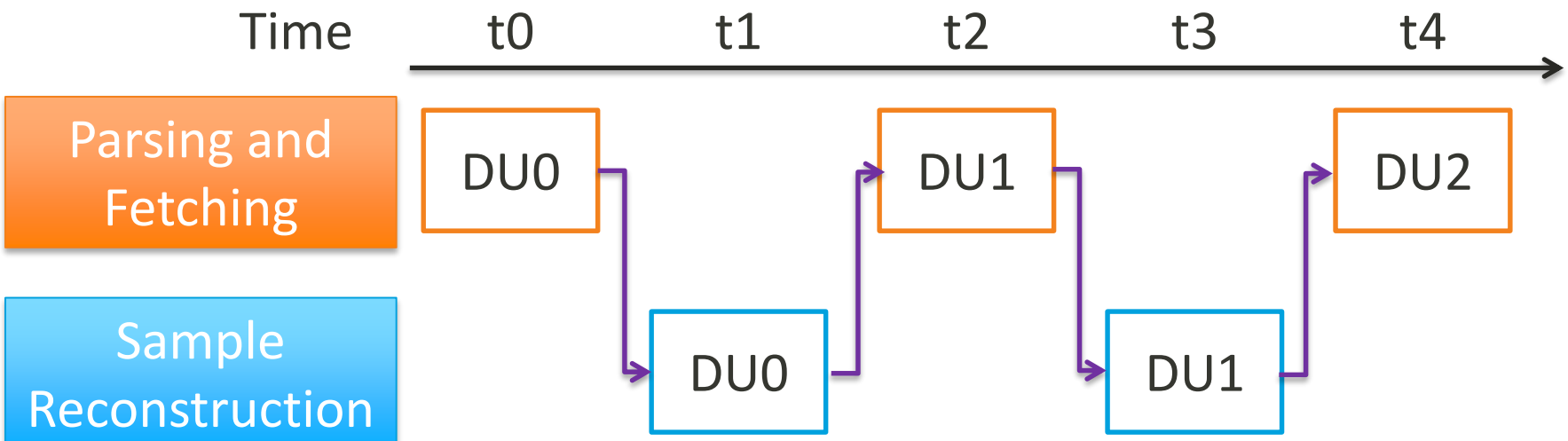

Proposed MV Prediction Modification

- In a DMVD tool, an unrefined MV is first obtained without any need to access reference picture samples
- In MV reconstruction in a DU
  - If the block of the referenced MV is within the current CTU row, the unrefined MVs are used.
  - If the block of the referenced MV is above the current CTU row or in the temporal collocated picture, the refined MVs are used.
- Refined MVs are used in overlapped block motion compensation (OBMC) and deblocking.

Simulation Results

- The proposed method can preserve 72%-83% of the gain of DMVD and OBMC in VTM.
  - The detail results are provided in JVET-K0256.

Method	VTM			
	Y	U	V	Y-Preserved
DMVR + OMBC	-3.60%	-4.40%	-4.58%	
DMVR + OMBC + Proposed	-2.59%	-3.57%	-3.66%	72%
DMVR + CE9.2.1 + OMBC	-7.03%	-6.94%	-7.24%	
DMVR + CE9.2.1 + OMBC + Proposed	-5.81%	-5.96%	-6.17%	83%

Thank Alibaba for cross-checking

Conclusions

- Propose a MV prediction modification for improving the processing throughput
  - If the block of the referenced MV is within the current CTU row, the unrefined MV is used.
  - If the block of the referenced MV is above the current CTU row or in the temporal collocated picture, the refined MV is used.
  - Refined MVs are used in overlapped block motion compensation (OBMC) and deblocking.
- 72%-83% of the gain of DMVD and OBMC in VTM-1.0 is preserved.



everyday genius

Results of DMVR + OMBC

	Random Access Main 10									
	Over VTM-1.0					Over BMS-1.0				
	Y	U	V	EncT	DecT	Y	U	V	EncT	DecT
Class A1	-3.49%	-3.78%	-4.47%	115%	157%	-0.47%	-1.11%	-1.26%	104%	115%
Class A2	-5.71%	-6.44%	-6.28%	117%	177%	-1.23%	-2.12%	-2.71%	108%	138%
Class B	-3.00%	-3.83%	-3.88%	122%	168%	-1.22%	-2.35%	-2.16%	109%	133%
Class C	-2.84%	-4.06%	-4.25%	128%	162%	-1.79%	-2.81%	-2.88%	108%	135%
Class E										
Overall	-3.60%	-4.40%	-4.58%	121%	166%	-1.22%	-2.18%	-2.28%	107%	131%
Class D	-2.59%	-3.44%	-3.63%	134%	167%	-1.85%	-2.92%	-2.80%	112%	146%
Class F (optional)	-0.33%	-1.23%	-1.32%	121%	137%	-0.16%	-1.10%	-1.05%	106%	124%

Results of DMVR + OMBC + Proposed

	Random Access Main 10									
	Over VTM-1.0					Over BMS-1.0				
	Y	U	V	EncT	DecT	Y	U	V	EncT	DecT
Class A1	-2.24%	-2.97%	-3.49%	116%	162%	0.19%	-0.61%	-0.66%	106%	130%
Class A2	-3.78%	-4.69%	-4.51%	118%	179%	-0.44%	-1.30%	-1.92%	109%	157%
Class B	-2.22%	-3.23%	-3.16%	125%	171%	-0.91%	-2.11%	-1.86%	109%	144%
Class C	-2.42%	-3.60%	-3.77%	129%	162%	-1.54%	-2.45%	-2.51%	110%	140%
Class E										
Overall	-2.59%	-3.57%	-3.66%	123%	168%	-0.76%	-1.74%	-1.81%	109%	142%
Class D	-2.25%	-3.00%	-3.14%	136%	170%	-1.64%	-2.54%	-2.44%	112%	145%
Class F (optional)	-0.13%	-0.97%	-1.09%	121%	140%	-0.15%	-1.06%	-0.99%	108%	132%

Results of DMVR + CE9.2.1 + OMBC

	Random Access Main 10									
	Over VTM-1.0					Over BMS-1.0				
	Y	U	V	EncT	DecT	Y	U	V	EncT	DecT
Class A1	-5.99%	-5.85%	-6.71%	190%	283%	-2.23%	-2.54%	-3.03%	129%	162%
Class A2	-11.37%	-10.42%	-10.52%	198%	399%	-5.16%	-5.12%	-5.78%	140%	207%
Class B	-6.34%	-6.17%	-6.20%	217%	329%	-3.42%	-4.03%	-3.95%	140%	190%
Class C	-5.42%	-6.11%	-6.47%	227%	328%	-3.74%	-4.65%	-4.74%	139%	217%
Class E										
Overall	-7.03%	-6.94%	-7.24%	210%	331%	-3.62%	-4.12%	-4.34%	137%	194%
Class D	-5.83%	-5.92%	-6.02%	242%	366%	-4.38%	-4.76%	-4.83%	142%	245%
Class F (optional)	-1.45%	-2.48%	-2.45%	200%	201%	-0.74%	-1.84%	-1.73%	131%	172%

	Low delay B Main10									
	Over VTM-1.0					Over BMS-1.0				
	Y	U	V	EncT	DecT	Y	U	V	EncT	DecT
Class A1										
Class A2										
Class B	-1.82%	-2.72%	-3.00%	279%	172%	-1.76%	-3.60%	-3.62%	168%	171%
Class C	-2.07%	-3.09%	-3.62%	260%	187%	-2.54%	-4.11%	-4.58%	167%	185%
Class E	-2.27%	-2.18%	-2.26%	289%	251%	-2.85%	-3.22%	-3.01%	180%	245%
Overall	-2.02%	-2.71%	-3.02%	275%	194%	-2.30%	-3.67%	-3.79%	170%	192%
Class D	-2.26%	-2.86%	-3.14%	252%	195%	-3.10%	-3.41%	-4.32%	175%	236%
Class F (optional)	0.24%	-1.06%	-0.91%	234%	160%	0.08%	-1.25%	-1.14%	151%	165%

Results of DMVR+CE9.2.1+OMBC+Proposed

	Random Access Main 10									
	Over VTM-1.0					Over BMS-1.0				
	Y	U	V	EncT	DecT	Y	U	V	EncT	DecT
Class A1	-4.73%	-4.92%	-5.58%	192%	353%	-1.49%	-2.04%	-2.31%	129%	167%
Class A2	-9.32%	-8.76%	-8.72%	205%	477%	-3.98%	-4.14%	-4.80%	141%	213%
Class B	-5.28%	-5.33%	-5.33%	218%	386%	-2.77%	-3.53%	-3.32%	141%	196%
Class C	-4.67%	-5.41%	-5.75%	235%	344%	-3.17%	-4.07%	-4.19%	141%	222%
Class E										
Overall	-5.81%	-5.96%	-6.17%	214%	384%	-2.87%	-3.50%	-3.65%	139%	199%
Class D	-5.06%	-5.27%	-5.32%	244%	372%	-3.82%	-4.10%	-4.25%	146%	252%
Class F (optional)	-0.97%	-1.98%	-1.96%	207%	212%	-0.53%	-1.63%	-1.53%	129%	168%

	Low delay B Main10									
	Over VTM-1.0					Over BMS-1.0				
	Y	U	V	EncT	DecT	Y	U	V	EncT	DecT
Class A1										
Class A2										
Class B	-1.64%	-2.59%	-2.68%	284%	184%	-1.64%	-3.55%	-3.33%	168%	178%
Class C	-1.88%	-2.80%	-3.46%	264%	197%	-2.39%	-4.20%	-4.31%	173%	195%
Class E	-1.70%	-2.05%	-2.11%	291%	271%	-2.37%	-2.95%	-2.79%	178%	255%
Overall	-1.73%	-2.52%	-2.80%	279%	207%	-2.07%	-3.62%	-3.52%	172%	201%
Class D	-2.05%	-3.22%	-3.18%	257%	204%	-2.83%	-3.41%	-3.97%	177%	242%
Class F (optional)	0.48%	-0.96%	-0.75%	239%	170%	-0.01%	-0.81%	-1.00%	153%	169%