INTERNATIONAL TELECOMMUNICATION UNION

ITU-T

TELECOMMUNICATION
STANDARDIZATION SECTOR
OF ITU

X.421

(06/1999)

SERIES X: DATA NETWORKS AND OPEN SYSTEM COMMUNICATIONS

Message Handling Systems

Message Handling Systems: COMFAX use of MHS

ITU-T Recommendation X.421

(Previously CCITT Recommendation)

ITU-T X-SERIES RECOMMENDATIONS

DATA NETWORKS AND OPEN SYSTEM COMMUNICATIONS

PUBLIC DATA NETWORKS	
Services and facilities	X.1–X.19
Interfaces	X.20–X.49
Transmission, signalling and switching	X.50–X.89
Network aspects	X.90–X.149
Maintenance	X.150–X.179
Administrative arrangements	X.180–X.199
OPEN SYSTEMS INTERCONNECTION	
Model and notation	X.200–X.209
Service definitions	X.210–X.219
Connection-mode protocol specifications	X.220–X.229
Connectionless-mode protocol specifications	X.230–X.239
PICS proformas	X.240–X.259
Protocol Identification	X.260–X.269
Security Protocols	X.270–X.279
Layer Managed Objects	X.280–X.289
Conformance testing	X.290–X.299
INTERWORKING BETWEEN NETWORKS	
General	X.300–X.349
Satellite data transmission systems	X.350–X.399
MESSAGE HANDLING SYSTEMS	**X.400–X.499**
DIRECTORY	X.500–X.599
OSI NETWORKING AND SYSTEM ASPECTS	
Networking	X.600–X.629
Efficiency	X.630–X.639
Quality of service	X.640–X.649
Naming, Addressing and Registration	X.650–X.679
Abstract Syntax Notation One (ASN.1)	X.680–X.699
OSI MANAGEMENT	
Systems Management framework and architecture	X.700–X.709
Management Communication Service and Protocol	X.710–X.719
Structure of Management Information	X.720–X.729
Management functions and ODMA functions	X.730–X.799
SECURITY	X.800–X.849
OSI APPLICATIONS	
Commitment, Concurrency and Recovery	X.850–X.859
Transaction processing	X.860–X.879
Remote operations	X.880–X.899
OPEN DISTRIBUTED PROCESSING	X.900–X.999

For further details, please refer to ITU-T List of Recommendations.

ITU-T RECOMMENDATIONS SERIES

Series A	Organization of the work of the ITU-T
Series B	Means of expression: definitions, symbols, classification
Series C	General telecommunication statistics
Series D	General tariff principles
Series E	Overall network operation, telephone service, service operation and human factors
Series F	Non-telephone telecommunication services
Series G	Transmission systems and media, digital systems and networks
Series H	Audiovisual and multimedia systems
Series I	Integrated services digital network
Series J	Transmission of television, sound programme and other multimedia signals
Series K	Protection against interference
Series L	Construction, installation and protection of cables and other elements of outside plant
Series M	TMN and network maintenance: international transmission systems, telephone circuits, telegraphy, facsimile and leased circuits
Series N	Maintenance: international sound programme and television transmission circuits
Series O	Specifications of measuring equipment
Series P	Telephone transmission quality, telephone installations, local line networks
Series Q	Switching and signalling
Series R	Telegraph transmission
Series S	Telegraph services terminal equipment
Series T	Terminals for telematic services
Series U	Telegraph switching
Series V	Data communication over the telephone network
Series X	**Data networks and open system communications**
Series Y	Global information infrastructure and Internet protocol aspects
Series Z	Languages and general software aspects for telecommunication systems

18352

Printed in Switzerland
Geneva, 2001

ITU-T RECOMMENDATION X.421

MESSAGE HANDLING SYSTEMS: COMFAX USE OF MHS

Summary

This revision of Recommendation X.421 is a consolidation of Recommendation X.421 (07/94) and Recommendation X.421/Amd.1 (12/97). Recommendation X.421 defines the usage of the X.400 protocols, mainly the Interpersonal Messaging protocol (P2) and the Message Transfer protocol (P1), to provide a global COMFAX service. The COMFAX service, as defined in Recommendations F.162 (1996) and F.163 (1996), specifies a store and forward facsimile service where MHS may be used to provide a means of moving facsimile messages in COMFAX services. Recommendations F.162 and F.163 describe the COMFAX service using Facsimile store and Forward units (Fax SFUs) and its interconnection requirements. This Recommendation describes an X.400-based protocol for interconnecting Fax SFUs.

Source

Following ITU-T decision to publish new editions of the set of Message Handling Recommendations, this edition of ITU-T Recommendations X.421, dated 18 June 1999, consolidates X.421 (07/94) and X.421 Amendment 1 (12/97).

FOREWORD

ITU (International Telecommunication Union) is the United Nations Specialized Agency in the field of telecommunications. The ITU Telecommunication Standardization Sector (ITU-T) is a permanent organ of the ITU. The ITU-T is responsible for studying technical, operating and tariff questions and issuing Recommendations on them with a view to standardizing telecommunications on a worldwide basis.

The World Telecommunication Standardization Conference (WTSC), which meets every four years, establishes the topics for study by the ITU-T Study Groups which, in their turn, produce Recommendations on these topics.

The approval of Recommendations by the Members of the ITU-T is covered by the procedure laid down in WTSC Resolution No. 1.

In some areas of information technology which fall within ITU-T's purview, the necessary standards are prepared on a collaborative basis with ISO and IEC.

NOTE

In this Recommendation, the expression "Administration" is used for conciseness to indicate both a telecommunication administration and a recognized operating agency.

INTELLECTUAL PROPERTY RIGHTS

The ITU draws attention to the possibility that the practice or implementation of this Recommendation may involve the use of a claimed Intellectual Property Right. The ITU takes no position concerning the evidence, validity or applicability of claimed Intellectual Property Rights, whether asserted by ITU members or others outside of the Recommendation development process.

As of the date of approval of this Recommendation, the ITU had not received notice of intellectual property, protected by patents, which may be required to implement this Recommendation. However, implementors are cautioned that this may not represent the latest information and are therefore strongly urged to consult the TSB patent database.

CONTENTS

Page

1 Scope 1

2 References 1

3 Definitions 1

3.1 Terms defined in this Recommendation 1

3.2 Terms defined in ITU-T Recommendation X.402 (1999) 2

3.3 Terms defined in ITU-T Recommendation X.411 (1999) 2

3.4 Terms defined in ITU-T Recommendation X.420 (1999) 2

4 Abbreviations 2

5 Functional Model 2

6 Use of X.400 Protocols 3

6.1 Actions by Fax SFU 3

6.2 Addressing and routing 3

6.3 COMFAX service cover page 8

6.4 COMFAX L1N and L2N notifications 9

6.5 Codes for COMFAX L1N and L2N notifications 10

List of Tables

Table 1/X.421 – Use of X.400 protocols to provide COMFAX service 4

Table 2/X.421 – Information in COMFAX service cover page 8

Table 3/X.421 – Matching between L1N and delivery-report 9

Table 4/X.421 – Matching between L2N and ipn 10

Table 5/X.421 – Codes for L1N 11

Table 6/X.421 – Codes for L2N 11

List of Figures

Figure 1/X.421 – Functional model for COMFAX service 3

MESSAGE HANDLING SYSTEMS: COMFAX USE OF MHS

1 Scope

This Recommendation defines a functional model and operational procedures to interconnect Fax SFUs using MHS protocols.

To provide seamless interaction, this Recommendation details the specific elements of P1 and P2 protocols defined in the X.400-series Recommendations to be used for the store and forward exchange of facsimile messages between SFUs. Interworking between the COMFAX service and other MHS services is for further study.

2 References

The following ITU-T Recommendations and other references contain provisions which, through reference in this text, constitute provisions of this Recommendation. At the time of publication, the editions indicated were valid. All Recommendations and other references are subject to revision; all users of this Recommendation are therefore encouraged to investigate the possibility of applying the most recent edition of the Recommendations and other references listed below. A list of the currently valid ITU-T Recommendations is regularly published.

– ITU-T Recommendation F.162 (1996), *Service and operational requirements of store-and-forward facsimile service (COMFAX).*

– ITU-T Recommendation F.163 (1996), *Operational requirements of the interconnection of facsimile store-and-forward units.*

– ITU-T Recommendation F.400/X.400 (1999), *Message handling system and service overview.*

ISO/IEC 10021-1:1999, *Information technology – Text Communication – Message Handling Systems (MHS) – Part 1: System and Service Overview.*

– CCITT Recommendation F.410 (1992), *The public message transfer service.*

– ITU-T Recommendation X.402 (1999) | ISO/IEC 10021-2:1999, *Information technology – Message Handling Systems (MHS): Overall architecture.*

– ITU-T Recommendation X.411 (1999) | ISO/IEC 10021-4:1999, *Information technology – Message Handling Systems (MHS): Message transfer system: Abstract service definition and procedures.*

– ITU-T Recommendation X.420 (1999) | ISO/IEC 10021-7:1999, *Information technology – Message Handling Systems (MHS): Interpersonal messaging system.*

3 Definitions

3.1 Terms defined in this Recommendation

This Recommendation defines the following terms:

3.1.1 originating Fax SFU: The Fax SFU which has accepted a message from a user of COMFAX is defined as the Originating Fax SFU of this message.

3.1.2 destination Fax SFU: The Fax SFU which has the responsibility to deliver a message to a recipient is defined as the Destination Fax SFU of this message.

3.1.3 originating COMFAX-AU: The COMFAX-AU which has accepted a message from a user of COMFAX is defined as the Originating COMFAX-AU of this message.

3.1.4 destination COMFAX-AU: The COMFAX-AU which has the responsibility to deliver a message to a recipient is defined as the Destination COMFAX-AU of this message.

3.1.5 transfer System: A MHS store and forward message transfer system which can transfer messages between SFUs or between COMFAX and other MHS services is called a *transfer system*. Details of interconnection requirements between COMFAX and other MHS services and the associated protocols are for further study.

3.2 Terms defined in ITU-T Recommendation X.402

This Recommendation uses terms defined in ITU-T Recommendation X.402.

a) Access Unit (AU);

b) Message Transfer Agent (MTA);

c) Message Transfer System (MTS);

d) MHS-users;

e) MTS-users.

3.3 Terms defined in ITU-T Recommendation X.411

This Recommendation uses terms defined in ITU-T Recommendation X.411:

– Message transfer protocol (P1).

3.4 Terms defined in ITU-T Recommendation X.420

This Recommendation uses terms defined in ITU-T Recommendation X.420:

– Interpersonal messaging protocol (P2 or IPM).

4 Abbreviations

This Recommendation uses the following abbreviations together with those listed in Recommendation X.402:

COMFAX	Service and operational requirements of store and forward facsimile service
COMFAX-AU	COMFAX access unit
COMFAX-user	A direction of the COMFAX service
Fax SFU	Facsimile store and forward unit.

5 Functional Model

This clause provides a functional model of COMFAX based on Recommendation X.402. Figure 1 describes this model. COMFAX service is provided by objects such as SFU and users. The Fax SFU engages the services of MHS through transfer-ports that are associated with each message transfer agent (MTA). One or more MTAs compose the MHS message transfer system. An MTA may be associated with zero or more access units. Once the facsimile message enters the MTS, it is encapsulated in MHS P2 and P1 protocols. In MHS the P2 protocol is used between MHS-users and the P1 protocol is used between MTS users. In Figure 1, Functional Model for COMFAX service, the COMFAX-AU is the MTS-user in its interaction with the MTA and it also represents the MHS-user on behalf of the COMFAX-user. In this figure, the COMFAX-user is represented by the term *user*.

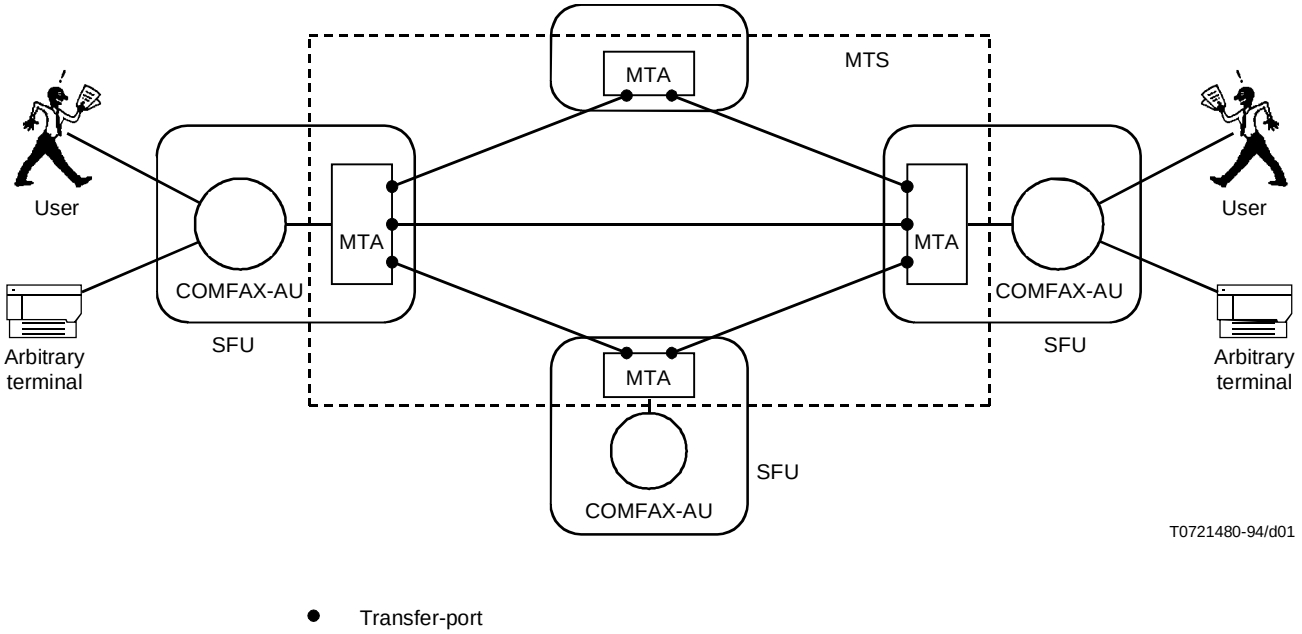

Figure 1/X.421 – Functional model for COMFAX service

6 Use of X.400 Protocols

6.1 Actions by Fax SFU

Table 1 describes actions to be taken by Fax SFUs to provide interconnection. Table 1 also describes actions to be taken by a MTS when it is used to transfer messages between Fax SFUs. Use of X.400 protocol elements which are not defined in this Recommendation are for further study.

6.2 Addressing and routing

Originators and recipients of messages shall be identified by OR-names as defined in Recommendation X.402. Telephone numbers of G3 facsimile terminals connected to public telephone network shall be identified by network-address. It is recommended that country-name, administration-domain-name are specified when the network-address is used. Use of other types of name to identify telephone numbers for originators and recipients is a local matter.

NOTE – It is not allowed in Recommendation X.411 (1984 or 1988) to combine network-address with other types of name elements such as personal-name for one recipient. This feature can be provided either by *bilateral agreement* or by using Recommendation X.411 (1992 or later).

Routing of messages between Fax SFUs and/or Transfer Systems shall be performed according to Recommendation X.411. Routing of messages inside a Fax SFU is a *local matter*.

Table 1/X.421 – Use of X.400 protocols to provide COMFAX service

Reference	COMFAX Element of service	Actions to be taken by Fax SFU and/or Transfer System	Related protocol elements	ORG	DST
6.1/F.163	Single address message	Each COMFAX subscriber identified by an access management procedure has a unique OR address. This OR address is encoded in the **originator-name** element and the **originator** element of a message in the Originating Fax SFU. A value used in the **originator-name** element and the **originator** element shall be the same. A recipient address of a single address message is encoded in the **recipient-name** element and the **primary-recipients** element of a message in the Originating Fax SFU. The **primary-recipients** element is used to display the Recipient Information in a cover page in the destination Fax SFU. A name value used in the **recipient-name** element and the **primary-recipients** element shall be the same. A P1 positive and negative **delivery-reports** may be requested on a per message basis. On origination, it conveys the Originating Fax SFUs desire to receive a transfer system report for the named recipient indicating that the message has left the transfer system and is now in the possession of the Destination Fax SFU, see 6.7 and 6.8/F.163. **Content-type** is set to 2 according to X.420 (Note 1). **Trace-information** element is used according to X.411. G3 Image data of a message is encoded into **g3-facsimile** (body part) element (Note 2).	**P1**: originator-name recipient-name content-type trace-information per-recipient-indicators: originating-MTA-report originating-MTA-non-delivery-report **P2**: originator primary-recipients g3-facsimile	 M M M M M O M M M M	 M M M M M M M M M M

Table 1/X.421 – Use of X.400 protocols to provide COMFAX service *(continued)*

Reference	COMFAX Element of service	Actions to be taken by Fax SFU and/or Transfer System	Related protocol elements	ORG	DST
6.1/F.163	Multiple address message	Each customer identified by an access management procedure has a unique OR address. This name is encoded in the **originator-name** element and the **originator** element of a message in the Originating Fax SFU. A name used in the **originator-name** element and the **originator** element shall be the same. Recipient addresses of a multiple address message are encoded in the **recipient-name** element and the **primary-recipients** element of a message in the Originating Fax SFU. The **primary-recipients** element is used to display the Recipient Information in a cover page in the Destination Fax SFU. A name value used in the **recipient-name** element and the **primary-recipients** element shall be the same. A P1 positive and negative **delivery-report** may be requested on a per message basis. On origination, it conveys the Originating Fax SFUs desire to receive a transfer system report for each recipient indicating that the message has left the transfer system and is now in the possession of the Destination Fax SFU, see 6.7 and 6.8/F.163. **Content-type** is set to 2 according to X.420 (Note 1). **Trace-information** element is used according to X.411. G3 Image data of a message is encoded into **g3-facsimile** (body part) element (Note 2).	**P1**: originator-name recipient-name (Note 3) content-type trace-information per-recipient-indicators: originating-MTA-report originating-MTA-non-delivery-report **P2**: originator primary-recipients g3-facsimile (body part)	 M M M M O M M M M	 M M M M M M M M M
6.2/F.163	Address list codes	Address list codes are converted into individual recipient addresses in the Originating Fax SFU. Use of distribution list as defined in X.411 is for further study.	**None**		
6.3/F.163	Message identification	A unique combination of IA5 characters, which is assigned by an Originating Fax SFU, is encoded in the *local-identifier* element in the message-identifier and the *user-relative-identifier* element in the **ThisIPMField** to identify each message globally.	**P1**: message-identifier **P2**: this-IPM	M M	M M

Table 1/X.421 – Use of X.400 protocols to provide COMFAX service *(continued)*

Reference	COMFAX Element of service	Actions to be taken by Fax SFU and/or Transfer System	Related protocol elements	ORG	DST
6.4/F.163	Class of message delivery	The class of message delivery specified by an originator of a message is encoded in the priority element in the Originating Fax SFU. Each Fax SFU and MTS shall handle the priority to fulfil the requirements defined in F.163 and F.410, respectively (Note 4).	**P1**: priority (default value is **normal**)	O	M
6.5/F.163	Message deferral	Message deferral function is performed in an Originating Fax SFU as a local matter.	**None**		
6.6/F.163	Cover page	In case where no cover page is requested by the originator, the Originating SFU sets the value '**no-cover-page**' object identifier (see Annex A/X.411) in the **physical-rendition-attributes** element of the **PerRecipientMessageTransferFields** (Note 5), and there will be no cover page attached on delivery by the Recipient SFU. Otherwise, a cover page is attached as follows. A COMFAX service cover page is attached to a message in the Destination Fax SFU. The format of the display of this type of cover page is a local matter of this Fax SFU. The information provided in the Originating Fax SFU to be displayed in the service cover page is defined in Table 2. A customer defined cover page is attached to a message in the Originating Fax SFU. This type of cover page is handled as the first page of a message in other Fax SFUs. Omission of service cover page may also be arranged by *bilateral agreement*.	**P1**: physical-rendition-attributes See Table 2	O	O
6.7/F.163	Advice of successful message transfer	When a Destination SFU successfully accepts the message, it shall generate and return a delivery-report when it is requested by the Originating Fax SFU by means of setting the report or audited-report value of the **Originating-MTA-report-request**. The information supplied in the delivery-report is described in Table 3.	**P1**: delivery-report	O	M
6.7/F.163	Advice of unsuccessful message transfer	When any Fax SFU or MTS determines that a message can neither be accepted by it nor transferred to another Fax SFU or MTA, it shall generate and return a non-delivery-report. The **Originating-MTA-report-request** argument shall always have the value *non-delivery report*, *report* or *audited-report*. The information supplied in the *non-delivery-report* is described in Table 3.	**P1**: non-delivery-report	M	M

Table 1/X.421 – Use of X.400 protocols to provide COMFAX service *(concluded)*

Reference	COMFAX Element of service	Actions to be taken by Fax SFU and/or Transfer System	Related protocol elements	ORG	DST
6.8/F.163	Advice of successful message delivery	When a Destination Fax SFU successfully delivers a message to a recipient subsequent to having accepted it from the transfer system, it shall generate and return an IPM receipt notification (RN) *only when* it is requested by the Originating Fax SFU. RN requests are indicated by means of the originator having set the **rn** bit of *notification-requests* element of the P2 *Recipient Specifier* for this recipient. The information supplied in the RN is described in Table 4.	**P2:** *Originating Fax SFU:* notification-requests *Receiving Fax SFU:* receipt-notification	M M	M M
6.8/F.163	Advice of unsuccessful message delivery	When a Destination Fax SFU determines that it cannot deliver the message after successfully accepting it from the transfer system, it shall generate and return an IPM non-receipt notification (NRN). The **nrn** bit of *notification-requests* for each primary-recipients shall be always set to ON (1) by the Originating Fax SFU for each recipient. The information supplied in the NRN is described in Table 4.	**P2:** *Originating Fax SFU:* notification-requests *Receiving Fax SFU:* non-receipt-notification	M M	M M
6.9/F.163	Facsimile format conversion	If an Originating Fax SFU supports facsimile formats other than G3 facsimile, it shall support conversion from these facsimile format to G3 facsimile. Transfer of message in formats other than G3 facsimile shall be performed by *bilateral agreement*.		–	–

ORG Originating Fax SFU

DST Destination Fax SFU

M Support of protocol element, or service related to the protocol element, is MANDATORY in accordance with the requirements of F.162, F.163 and the relevant X.400-series Recommendations.

O Support of protocol element, or service related to the protocol element, is OPTIONAL in accordance with the requirements of F.162, F.163 and the relevant X.400-series Recommendations.

NOTE 1 – By bilateral agreement, protocol elements defined in Recommendations X.420 and/or X.411 can be used. In the former case content type 22 shall be assigned.

NOTE 2 – It is recommended to minimize the number of body parts in one message since some implementations may limit the number of body parts that it can handle on reception.

NOTE 3 – Recommendation F.162 permits a maximum of 512 recipients per message. However, Recommendation X.411 permits a maximum of 256 recipients per message. If necessary, the originating Fax SFU shall split messages so that the number of recipients in a message transmitted to another Fax SFU does not exceed 256. The way to split such a message and to provide cross reference is a local matter.

NOTE 4 – Per Recommendation F.410, NORMAL Priority means that 95% of the messages should be transferred between COMFAX-AU in less than 60 minutes, sooner if possible. Urgent Priority means that 95% of the messages should be transferred between COMFAX-AUs in less than 15 minutes. Although most often, normal priority messages leave the MTS within 4 minutes, consideration should be given to the choice of normal versus urgent priority.

NOTE 5 – In order to allow interworking with older COMFAX implementations, it is recommended that the use of the P1 extension **physical-rendition-attribute** is not marked *critical-for-delivery*.

6.3 COMFAX service cover page

Table 2 shows protocol elements used to display information in a COMFAX service cover page.

Table 2/X.421 – Information in COMFAX service cover page

		P1	P2
Image Field		–	For further study
Recipient information		(Note)	
*	Personal name	personal-name	
*	Common name	common-name	
	Free form name	–	free-form-name
*	Organization	organization-name	
*	Organizational units	organizational-unit-names	
*	Physical address lines	For further study	
	Fax network address	network-address	
	Telephone number	–	telephone-number
Message information			
	Pages	–	For further study
	Priority	priority	–
	Submission date and time	first arrival-time	–
	Message reference	–	this-IPM
	Subject	–	subject
Originator information		(Note)	
*	Personal name	personal-name	
*	Common name	common-name	
	Free form name	–	free-form-name
*	Organization	organization-name	
*	Organizational units	organizational-unit-names	
*	Physical address lines	For further study	
	Fax network address	network-address	
	Telephone number	–	telephone-number

* Protocol elements identified by an asterisk (*) are only supported in 1992 or later MHS implementations in a Terminal OR address.

NOTE – The support of name elements is defined in Recommendation X.402. The subject element is optionally supported, all other protocol elements are mandatory to be handled on reception.

6.4 COMFAX L1N and L2N notifications

Tables 3 and 4 describe elements of X.400 protocols to provide information of L1N and L2N notifications defined in Recommendations F.162 and F.163.

NOTE – No distinction is drawn between the event of the COMFAX service immediately rendering the message onto a recipient's facsimile terminal or depositing a facsimile message into a COMFAX service mailbox.

Table 3/X.421 – Matching between L1N and delivery-report

Contents of L1N		Elements of P1 delivery-report	Status
Common fields			
	Original message identifier	subject-identifier	M
	Recipient address	actual-recipient-name	M
	Original encoded information types	original-encoded-information-types (Note 1)	O
	Converted encoded information types	converted-encoded-information-types	C
Successful transfer fields			
	Last transfer time	message-delivery-time	M
Unsuccessful transfer fields			
	Reason code	non-delivery-reason-code (Note 2)	M
	Diagnostic code	non-delivery-diagnostic-code (Note 3)	

M Generation of the protocol element is MANDATORY

C Generation of the protocol element is MANDATORY only when *conversion* is performed

O Generation of the protocol element is OPTIONAL

NOTE 1 – Recommendation X.411 (1984) does not permit use of this parameter. This feature can be provided either by *bilateral agreement* or by using Recommendation X.411 (1992 or later).

NOTE 2 – The reason code values defined in X.411 and imported into this Recommendation include:

transfer-failure (0);
unable-to-transfer (1);
conversion-not-performed (2);
physical-rendition-not-performed (3);
physical-delivery-not-performed (4);
restricted-delivery (5);
directory-operation-unsuccessful (6);

NOTE 3 – The valid codes are listed in Table 5.

Table 4/X.421 – Matching between L2N and ipn

Contents of L2N		Elements of ipn	Status
Common fields			
	Original message identifier	subject-ipn	M
	Recipient address	ipn-originator	M
	Last encoded information types	conversion-eits	O
	SFU reference	For further study	C
Successful delivery fields			
	Time of delivery to recipient address	receipt-time	M
	Receiving terminal identifier	terminal-identifier For further study	O
	Number of pages	For further study	O
	Duration of delivery	For further study	O
Unsuccessful delivery fields			
	Reason code	non-receipt-reason (Note 1)	M
	Diagnostic code	For further study (Note 2)	O
	Last attempt time	For further study	O
	Number of attempts	For further study	O
	Number of pages delivered	For further study	O

M Generation of the protocol element is MANDATORY

C Generation of the protocol element is MANDATORY only when *conversion* is performed

O Generation of the protocol element is OPTIONAL

NOTE 1 – Reason codes values are defined in X.420 and are imported into this Recommendation include:
ipm-discarded (0)

NOTE 2 – The valid codes are listed in Table 6.

6.5 Codes for COMFAX L1N and L2N notifications

Tables 5 and 6 describe typical usage of the codes in COMFAX service for L1N and L2N.

NOTE – The value in parenthesis included in the discard reason is the numeric value that is returned in MHS.

Table 5/X.421 – Codes for L1N

Event	Non-delivery diagnostic code
Illegal telephone number designated as a recipient	recipient-unavailable (4)
Maximum delivery time expired before a message reached its Destination SFU	maximum-time-expired (5)
Telephone number designated in the recipient field is illegal (does not match the numbering plan)	unrecognized-OR-name (0)
Too many pages in one message after trial of conversion	content-too-long (7)
Data in the body-part is not suitable for conversion	conversion-impractical (8)
Conversion is prohibited	implicit-conversion-prohibited (9)

Table 6/X.421 – Codes for L2N

Event	Code
Maximum delivery time is expired in Destination SFU	maximum-time-expired (FFS)
Destination terminal does not support the coding of the message	coding-not supported (FFS)
Quality of telephone line is too low	line-trouble (FFS)
Protocol error during transmission to a terminal	protocol-error (FFS)
FFS For further study NOTE – The assignment of code values is for further study.	