INTERNATIONAL TELECOMMUNICATION UNION

CCITT

THE INTERNATIONAL
TELEGRAPH AND TELEPHONE
CONSULTATIVE COMMITTEE

E.166
(10/92)

TELEPHONE NETWORK AND ISDN – OPERATION, NUMBERING, ROUTING AND MOBILE SERVICE

X.122
(09/92)

DATA COMMUNICATION NETWORKS: NETWORK ASPECTS

NUMBERING PLAN INTERWORKING FOR THE E.164 AND X.121 NUMBERING PLANS

Recommendation E.166/X.122

FOREWORD

The CCITT (the International Telegraph and Telephone Consultative Committee) is a permanent organ of the International Telecommunication Union (ITU). CCITT is responsible for studying technical, operating and tariff questions and issuing Recommendations on them with a view to standardizing telecommunications on a worldwide basis.

The Plenary Assembly of CCITT which meets every four years, establishes the topics for study and approves Recommendations prepared by its Study Groups. The approval of Recommendations by the members of CCITT between Plenary Assemblies is covered by the procedure laid down in CCITT Resolution No. 2 (Melbourne, 1988).

Recommendation E.166/X.122 was prepared by Study Groups II and VII and was approved under the Resolution No. 2 procedure on the 10th of September 1992.

CCITT NOTE

In this Recommendation, the expression "Administration" is used for conciseness to indicate both a telecommunication administration and a recognized private operating agency.

Recommendation E.166 / X.122

NUMBERING PLAN INTERWORKING FOR THE E.164 AND X.121 NUMBERING PLANS

(1992)

CONTENTS

1 Introduction

Different public networks currently make use of different numbering plans. A call from an integrated services digital network (ISDN) to a packet switched public data network (PSPDN), a PSPDN to an ISDN and calls routed through networks using a different numbering plan than that of the originating or destination network, are examples of the need to reconcile the differences that exist. Public switched telephone networks (PSTNs) are also covered.

Numbering plan interworking is a fundamental requirement for successful completion of calls between networks with different numbering plans.

This Recommendation defines the general procedures applicable to numbering plan interworking between:

ISDNs and PSPDNs,

ISDNs and PSTNs,

PSPDNs and PSTNs.

The numbering and addressing principles for PSTN/ISDN are described in Recommendation I.330. The numbering and addressing principles for public data networks are contained within Recommendation X.121.

2 Scope

2.1 The scope of this Recommendation is to define the procedures applicable for the purpose of numbering plan interworking for networks which use the E.164 numbering plan and networks which use the X.121 numbering plan.

2.2 Although both the E.164 and the X.121 numbering plans accommodate both circuit mode and packet mode subscribers, interworking between numbering plans (i.e. E.164 and X.121) covered in this Recommendation involve only packet mode calls.

2.3 Interworking involving two or more networks is included in the scope of this Recommendation.

2.4 This Recommendation applies to numbering plan interworking across international boundaries. Its applicability to calls within a single country is a national matter.

2.5 The sample call flows shown in the figures are from terminal to terminal. For those situations that involve escape codes, it should be noted that the interworking arrangements within a national network are a national matter.

2.6 The application of this Recommendation includes the following numbering plan interworking and bearer capability interworking scenarios:

a) calls from/to a speech terminal on an ISDN, to/from a voice terminal on a PSTN (see Figures 2 and 3);

b) calls from/to an X.25 terminal on an ISDN, to/from an X.25 terminal using X.32 procedures on a PSTN (see Figures 4 and 5);

c) calls from/to an X.25 terminal on an ISDN, to/from an X.25 terminal on another ISDN (see Figure 6);

d) calls from/to an X.25 terminal on a PSPDN, to/from an X.25 terminal using X.32 procedures on a PSTN (see Figures 7, 8, 27 and 28);

e) calls from/to an X.25 terminal on a PSPDN, to/from an X.25 terminal using X.31 procedures (BC = PS) on an ISDN (see Figures 11 and 12);

f) calls from/to an X.25 terminal on a PSPDN utilizing an ISDN packet switch as a transit network for calls to/from an X.25 terminal on a PSPDN (see Figure 13);

g) calls from/to an X.25 terminal using X.31 procedures (BC = PS) on an ISDN utilizing a PSPDN as a transit network for calls to/from an X.25 terminal using X.31 procedures (BC = PS) on another ISDN (see Figure 16);

h) calls from/to an X.25 terminal using X.31 procedures (BC = PS) on an ISDN utilizing a PSPDN as a transit network for calls to/from an X.25 terminal using X.31 procedures (BC = 64) on another ISDN (see Figures 14, 15, 17 and 18);

i) calls from/to an X.25 terminal using X.31 procedures (BC = PS) on an ISDN utilizing a PSPDN as a transit network for calls to/from an X.25 terminal using X.32 procedures on a PSTN (see Figures 19, 20, 21 and 22);

j) calls from/to an X.25 terminal using X.31 procedures (BC = PS) on an ISDN utilizing a PSPDN and an ISDN packet switch as transit networks for calls to/from an X.25 terminal using X.32 procedures on a PSTN (see Figures 23 and 24);

k) calls from/to an X.25 terminal on a PSPDN to/from an X.25 terminal using X.31 procedures (BC = 64) on an ISDN (see Figures 9, 10, 25 and 26).

Note – None of the scenarios listed above specifically address character mode data terminal equipment (DTE) (i.e. X.28 mode) access to a packet assembly/disassembly (PAD) nor Group 3 FAX (i.e. X.38 mode) access to a facsimile packet assembly/disassembly (FPAD). The short term scenarios for X.25 terminals are in most cases

applicable to X.28 and/or X.38 terminals. However, this is not the case for long term scenarios until a numbering plan identifier (NPI)-like facility is defined in Recommendations X.28 and/or X.38.

3 References

3.1 This Recommendation is related to and is compatible with the following Recommendations:

- Rec. E.160 — Definitions relating to national and international numbering plans.
- Rec. E.164 (I.331) — Numbering plan for the ISDN era.
- Rec. E.165 — Timetable for coordinated implementation of the full capability of the numbering plan for the ISDN era (Recommendation E.164).
- Rec. E.170 — Traffic routing.
- Rec. E.172 — Call routing in the ISDN era.
- Rec. E.173 — Routing plan for interconnection between public land mobile networks and fixed terminal networks.
- Rec. I.330 — ISDN numbering and addressing principles.
- Rec. Q.761 to Q.764 — Integrated services digital network user part (ISUR).
- Rec. Q.931 — ISDN user-network interface layer 3 specification for basic call control.
- Rec. X.25 — Interface between data terminal equipment (DTE) and data circuit-terminating equipment (DCE) for terminals operating in the packet mode and connected to public data networks by a dedicated circuit.
- Rec. X.28 — DTE/DCE interface for start–stop mode data terminal equipment accessing the packet assembly/disassembly facility (PAD) in a public data network situated in the same country.
- Rec. X.31 — Support of packet mode terminal equipment by an ISDN.
- Rec. X.32 — Interface between data terminal equipment (DTE) and data circuit terminating equipment (DCE) for terminals operating in the packet mode and accessing a packet switched public data network through a public switched telephone network or an integrated services digital network or a circuit switched public data network.
- Rec. X.38 — G3 facsimile equipment/DCE interface for G3 facsimile equipment accessing the facsimile packet assembly/disassembly facility (FPAD) in a public data network situated in the same country.
- Rec. X.75 — Packet-switched signalling system between public networks providing data transmission services.
- Rec. X.110 — International routing principles and routing plan for public data networks.
- Rec. X.121 — International numbering plan for public data networks.
- Rec. X.300 — General principles for interworking between public networks, and between public networks and other networks for the provision of data transmission services.
- Rec. X.301 — Description of general arrangements for call control within a subnetwork and between subnetworks for the provision of data transmission services.

4 Definitions

Within the integrated service and dedicated network environment, the terms used for all networks and services must be compatible and consistent. A list of terms and their definitions relating to numbering are contained in Recommendations E.160, E.164, and X.121. Additionally, the application of some of the definitions is found in § 6 of this Recommendation.

5 Abbreviations

The following abbreviations are used within this Recommendation:

64	64 kbits/s
AF	Address field
AU	Access unit
BC	Bearer capability
CRP	Call request packet
CS	Circuit switched
DCE	Data circuit-terminating equipment
DNIC	Data network identification code
DTE	Data terminal equipment
EC	Escape code
FPAD	Facsimile packet assembly/disassembly
ICP	Incoming call packet
ISDN	Integrated services digital network
NPI	Numbering plan identifier
ONSD	Optional network-specific digit
PAD	Packet assembly/disassembly
PDN	Public data network
PH	Packet handler
PS	Packet switched
PSPDN	Packet switched public data network
PSTN	Public switched telephone network
RPOA	Recognized private operating agency
SS No. 77	Signalling system No. 7

6 Interworking

6.1 *Numbering plans*

The two numbering plans included in the arrangements shown in this Recommendation are E.164 and X.121 numbering plans. It is strongly suggested that a reader who wishes to obtain maximum benefit from this Recommendation be familiar with the provisions of the indicated numbering plan Recommendations.

6.1.1 *Escape codes*

An escape code is an indicator consisting of one or more digits which is defined in a given numbering plan and is used to indicate that the address digits that follow it are from a specific numbering plan different from the given numbering plan. The escape codes (EC) discussed in this document are one digit in length.

An escape code may be carried through the originating network and across internetwork and international boundaries. Consequently, the different digits that serve as escape codes must be standardized. However, there may be cases when an internationally standardized escape code is the same value as a prefix already in use in a national network. In any such case, an optional network-specific digit (ONSD) may be used in lieu of the standard escape code. If an ONSD is used, it is the obligation of the national network to convert it to the standard escape code prior to passing it across an internetwork or international boundary unless bilateral agreements exist regarding the use of the ONSD between such networks.

The escape codes from X.121 to E.164 are defined in Recommendation X.121. The escape code 0 is used to escape from E.164 to X.121 for packet mode communications.

6.1.2 *Prefixes*

Definitions of prefixes are contained in Recommendations E.160 and X.121. Prefixes are not to be considered as part of an international number, therefore they are not to be signaled over internetwork or international boundaries. Prefixes are considered to be a national matter that is outside the scope of this Recommendation, consequently, the use of prefixes has not been included in the figures within this Recommendation.

6.1.3 *Allocation of a DNIC to an ISDN or PSTN*

In some countries (or RPOAs) a data network identification code (DNIC) may be allocated to an ISDN or PSTN. The use of a DNIC for that purpose is the decision of the country (or RPOA). In this case, the PSPDN using the DNIC to identify terminals on an interconnected ISDN should be capable of generating escape codes 9 and/or 0 for escaping to an ISDN/PSTN or PSTN that does not use the DNIC solution. The translation of the X.121 number to an E.164 number at the destination is permitted on a national basis. As far as the international subscriber is concerned, the called terminal has an X.121 number and the conversion, if required, is done in the destination country.

6.2 *Methods*

In the diagrams that are included in this Recommendation, there are two main situations when numbering interworking occurs. One situation is when a subscriber is placing a call and must indicate to the originating switch that numbering plan interworking is involved. The other is when one switching system is passing a call over a trunk to another switching system and must indicate to the receiving switching system that interworking is involved.

Three different methods of accomplishing numbering plan interworking are portrayed in the diagrams in this document. Any of the three methods may occur at call origination, but only two of the methods will occur between switches.

6.2.1 *Dial-in method*

The dial-in method of numbering plan interworking occurs when a caller on one network places a call that terminates on an access unit (i.e. entrance port) of another network that uses the numbering plan of the called subscriber. When the call from the originating subscriber reaches the access unit, it appears to the second network simply as a call origination. Thus, the caller places the call by using a two-step process. In the first step, the caller enters a called address in the originating network's numbering plan. The call proceeds to a termination point on the first network which is also an origination point on the second network. The caller receives dial tone or the equivalent of dial tone from the second network and then enters the called address using the numbering plan of the called party. Except for access unit functions, neither network needs to have a switching system that deals with numbering plan interworking.

6.2.2 *Escape code method*

The escape code method requires the existence of an escape code digit that will indicate to a switching system that the address that follows the escape code is in a different specific numbering plan. An escape code may be input by the caller as part of the called address. Also during call routing, an escape code may be inserted by a network component (e.g. switching system) as a leading digit in the address field when appropriate. Since they are interpreted as part of the address digit string, escape codes offer the advantage of being usable with inband signalling. However, that same characteristic makes them context dependent and requires that they be uniquely defined within a specific numbering plan.

6.2.3 *NPI method*

This method requires the use of a call control protocol and the existence of an NPI field within the protocol message that passes the called and calling addresses. The NPI field will contain a code that indicates what numbering plan the called (or calling) address belongs to. It is therefore not applicable to traditional PSTN call setup methods. The network components (e.g. switching systems) that handle the protocol messages must understand how to properly interpret the NPI field. The NPI method has the advantage of being unambiguous – the numbering plan is clearly and uniquely identified by the coding in the NPI field. Because of its clarity and flexibility, the NPI method is the recommended method for the long term.

6.3 *Subscriber dialling procedures*

To the extent reasonably possible, the method used for a numbering plan interworking arrangement should be such that it minimizes the impact on the user. When a subscriber in one numbering plan wishes to call a subscriber whose number is in another numbering plan, there are two basic methods for dialling such a call. The two methods are called the single stage method and the double stage (or two stage) method. Single stage methods are often considered preferable from the viewpoint of the caller, but the double stage method provides greater flexibility in some situations. Single stage operation also requires considerably greater implementation effort on the part of the network providers. Both single and double stage methods are included in the accompanying diagrams and are described below.

6.3.1 *Single stage dialling*

Single stage dialling to achieve numbering plan interworking is typically accomplished in one of two ways:

1) The first subscriber dialling procedure requires the existence of an escape code arrangement whereby the initial digit(s) dialled by the caller as part of the called address are interpreted by the originating switching system to mean that the subsequent address digits are in a different numbering plan identified by the escape code digit(s).

2) The second subscriber dialling procedure requires the existence of a user-to-network protocol that contains an NPI field and an originating terminal that provides some means whereby the caller can specify the appropriate NPI. The caller then enters the called number in an appropriate format. The originating switching system can then use the information in the NPI field to determine the numbering plan of the called address.

In either case, the caller must be aware that the called number is in another numbering plan and must use the proper NPI or escape code when the call is placed.

6.3.2 *Double stage dialling*

The double stage (or two-stage) method corresponds to an arrangement also commonly known as second dial tone. It derives its name from the fact that a caller must enter called address information in two separate stages. As the first stage or step in the process, the caller enters a called address that corresponds to a port of entry or access unit to a network that uses the numbering plan of the called subscriber. A connection is established between the caller and the access unit.

When the first connection has been established, the access unit sends a response (i.e. second dial tone or equivalent of a second dial tone) to the calling subscriber. At this point, the caller becomes equivalent to a subscriber on the network that has just returned the dial tone-like response. The caller then enters the address of the called subscriber. This second called address information is passed transparently through the originating network to the network that returned the second stage response. The call will then be established to the called subscriber.

Thus, the double stage method is essentially in its simplest form a manual numbering plan interworking arrangement where the caller uses a called address in the native numbering plan to access an entry port on a network that will then allow him to use the address of the called subscriber. Neither an escape code nor an NPI are required for this type of operation.

6.4 *Short term versus long term*

The diagrams in this Recommendation refer to either a short term or a long term interworking arrangement or both. It must be noted that there is no correlation between short term and double stage dialling or between long term and single stage dialling. As used in the diagrams, short term means the use of escape codes whereas long term means the use of an NPI in the protocol used for call control. The NPI exists in the Q.931 protocol used for ISDN D-channel signalling.

It should also be noted, however, that, aside from the above-mentioned use in the diagrams, short term and long term are sometimes used to mean pre-Time T and post-Time T, respectively. Time T is specified in Recommendation E.165. In yet another context, short term and long term are used more generically without specific time or method designations.

The recommended long-term solution for numbering plan interworking is the NPI method. It is not context dependent and it provides a high degree of flexibility and capability for growth. However, since the NPI are not yet available on a global basis, an interworking arrangement using escape codes has been developed for the short term. The escape code arrangement, like the NPI arrangement, allows originating callers to use single stage dialling.

To facilitate interworking using escape codes, Recommendation E.165 specifies that the international numbers assigned to ISDN user-network interfaces will remain a maximum of 12 digits until at least Time T. After Time T, ISDNs that so choose can implement the full 15-digit capability of Recommendation E.164.

It is envisioned that, based on their individual network evolution plans, some Administrations will implement the NPI-based interworking solutions prior to Time T. Introduction of NPI based interworking in a given network prior to Time T should not impose any specific requirements on networks not supporting NPI for interworking, unless bilaterally agreed.

6.5 *Reconciliation between short and long term implementations*

The subsequent diagrams in this Recommendation show interworking scenarios in which two networks are using the same approach, i.e. both are using the short term approach or both are using the long term approach. There will be cases however in which two networks will use the different approaches available. An example of this is the configuration in which the originating network supports the long term approach (i.e. the NPI) to place a call, but the destination network supports the short term approach (i.e. escape code). This interworking configuration mandates that a conversion process occurs to reconcile the presentation of the addresses to the destination network. Additionally, reconciliation between a terminal and the network may be required to facilitate short and long term implementations. This conversion process is subject to bilateral agreements between the involved networks.

6.6 *Internetwork implementation*

Because of the additional complexity, it is preferable that the numbering interworking function should not take place between two network nodes that are separated by an international boundary unless no other reasonable interworking possibility exists. In other words, it is preferable that, whenever possible, the network nodes on both ends of a call link that crosses an international boundary use the same native numbering plan. It is recognized that some administrations may not be able to offer interworking capability for international traffic. Therefore, bilateral arrangements may be required to provide interworking capability. Some networks may select interworking arrangements other than those shown in this document.

The number analysis capability of a PSPDN for interworking with ISDN or PSTN should be five digits. The need to analyse more than five digits is for further study.

6.7 *Man-machine interface procedures*

The man-machine interface procedures used with ISDN terminals to indicate the appropriate NPI are for further study.

7 Interworking diagrams

This section is comprised of three parts. The first part is a tutorial of the included interworking diagrams. The second part includes an index of the interworking diagrams that have been developed for this Recommendation. Finally, the third section contains the interworking diagrams.

7.1 *Tutorial for Figures 2 through 28*

7.1.1 The figures are intended only as examples and are consequently not restrictive unless it is specified.

7.1.2 A specific set of figures is associated with each direction of interworking, but for both directions, the same reference configuration is used for comparison.

7.1.3 Addresses are represented in the format applicable to the numbering plan. Prefixes are not included, but an escape code or NPI is shown where appropriate.

Furthermore, the presence and the exact format of the called and calling addresses at the DTE/DCE interface are network dependent, including possible use of prefixes.

7.1.4 The diagrams represent either 2, 3 or 4 network interworking cases.

7.1.5 Where appropriate, bearer capability and relevant Recommendations are shown.

7.1.6 The connection of networks and terminals, etc., are shown schematically by reference configurations.

7.1.6.1 Networks are represented by ovals, terminals by triangles, and the path between them by a line.

7.1.6.2 Vertical dotted arrows denote a place of possible international transit section/network. In cases where such international transit might occur, the diagrams will reflect the addresses signalled. Any part between two vertical dotted lines, or between a vertical dotted line and a terminal is a national matter.

7.1.6.3 Under each terminal symbol a type of terminal has been indicated. Where an X.31 (called or calling) terminal is shown, this indicates an X.25 terminal using X.31 procedures. Where an X.32 (called or calling) terminal is shown, this indicates an X.25 terminal using X.32 procedures. In addition, under this information is shown the numbering plan(s) in which the terminal is identified.

7.1.7 The number flows and additional call set-up procedures are shown in block diagram form under the network schematic.

7.1.7.1 The networks are represented by large vertical rectangles connected by smaller horizontal rectangles in a two layer structure.

7.1.7.2 The lower layer shows the called and calling numbers which are associated to the X.25 protocol elements [i.e. call request packet (CRP) and incoming call packet (ICP)]. This lower layer is always entirely present from the calling terminal to the called terminal.

Note – Figures 2 and 3 do not conform to this convention because they are not packet mode related.

7.1.7.3 The upper layer shows, when needed, the additional procedures associated with the establishment of the X.25 connection. This may include: establishment of a B-channel, establishment of an analogue connection, X.31 call offering procedures, etc.

Note – Figures 2 and 3 do not conform to this convention because they are not packet mode related.

7.1.7.4 The rectangles are numbered, indicating the order in which the necessary steps are carried out.

7.1.7.5 Access unit terminology in the diagrams is defined in Recommendation X.31, case A. This terminology is also used when X.32 is shown in the diagrams, as similarities exist in the two methods.

7.2 *Interworking diagrams*

The diagrams associated with interworking are divided into four sections:

Section A: Scenarios for interworking.

Section B: Bearer capability interworking that requires no numbering plan interworking.

Section C: Numbering plan interworking.

Section D: Interworking with terminals that have dual numbers.

7.2.1 *Section A: Scenarios for interworking*

Figure 1 Scenarios for interworking

7.2.2 *Section B: Bearer capability interworking that requires no numbering plan interworking*

Figure 2 Bearer capability interworking from an ISDN to a PSTN for voice services.

Figure 3 Bearer capability interworking from a PSTN to an ISDN for voice services.

Figure 4 Bearer capability interworking from an ISDN to a PSTN for packet data services.

Figure 5 Bearer capability interworking between a PSTN and an ISDN for packet data services.

Figure 6 Bearer capability interworking between ISDNs for packet data services.

7.2.3 *Section C: Numbering plan interworking*

Figure 7 Interworking from a PSPDN to a PSTN for the provision of X.32 service.

Figure 8 Interworking from a PSTN to a PSPDN for the provision of X.32 service.

Figure 9 Interworking from a PSPDN to an ISDN using X.31 procedures (BC = 64) in a case A environment.

Figure 10 Interworking from an ISDN using X.31 procedures (BC = 64) in a case A environment to a PSPDN.

Figure 11 Interworking from a PSPDN to an ISDN using X.31 procedures (BC = PS) in a case B environment.

Figure 12 Interworking from an ISDN using X.31 procedures (BC = PS) in a case B environment to a PSPDN.

Figure 13 Interworking from a PSPDN to another PSPDN with an ISDN (BC = PS) as a transit network.

Figure 14 Interworking from an ISDN using X.31 procedures (BC = PS) to an ISDN using X.31 procedures (BC = 64) with a PSPDN as a transit network.

Figure 15 Interworking from an ISDN using X.31 procedures (BC = 64) to an ISDN using X.31 procedures (BC = PS) with a PSPDN as a transit network.

Figure 16 Interworking from an ISDN using X.31 procedures (BC = PS) to an ISDN using X.31 procedures (BC = PS) with a PSPDN as a transit network.

Figure 17 Interworking from an ISDN using X.31 procedures (BC = PS) (E.164 address) to an ISDN using X.31 procedures (BC = 64) (X.121 address) with a PSPDN as a transit network.

Figure 18 Interworking from an ISDN using X.31 procedures (BC = 64) (X.121 address) to an ISDN using X.31 procedures (BC = PS) (E.164 address) with a PSPDN as a transit network.

Figure 19 Interworking from an ISDN using X.31 procedures (BC = PS) to a PSTN for the provision of X.32 service (X.121 address) with a PSPDN as a transit network.

Figure 20 Interworking from a PSTN using X.32 procedures (X.121 address) to an ISDN using X.31 procedures (BC = PS) (E.164 address), with a PSPDN as a transit network.

Figure 21 Interworking from an ISDN using X.31 procedures (BC = PS) to a PSTN for the provision of X.32 service with a PSPDN as a transit network.

Figure 22 Interworking from a PSTN using X.32 procedures to an ISDN using X.31 procedures (BC = PS), with a PSPDN as a transit network.

Figure 23 Interworking from an ISDN using X.31 procedures (BC = PS) to an ISDN using X.32-like procedures in conjunction with a PSTN, with a PSPDN as a transit network.

Figure 24 Interworking from a PSTN in conjunction with an ISDN using X.32-like procedures to an ISDN using X.31 procedures (BC = PS) with a PSPDN as a transit network.

7.2.4 *Section D: Interworking with terminals that have dual numbers*

Figure 25 Interworking from a PSPDN to an ISDN using X.31 procedures (BC = 64) (E.164 and X.121 address).

Figure 26 Interworking from an ISDN using X.31 procedures (BC = 64) (E.164 and X.121 address) to a PSPDN.

Figure 27 Interworking from a PSPDN to a PSTN using X.32 procedures (E.164 and X.121 address).

Figure 28 Interworking from a PSTN using X.32 procedures (E.164 and X.121 address) to a PSPDN.

7.3 *Diagrams*

Figure 1 is a representation of the interworking scenarios that need to be considered and provides a simple graphic depiction of the linkages between networks.

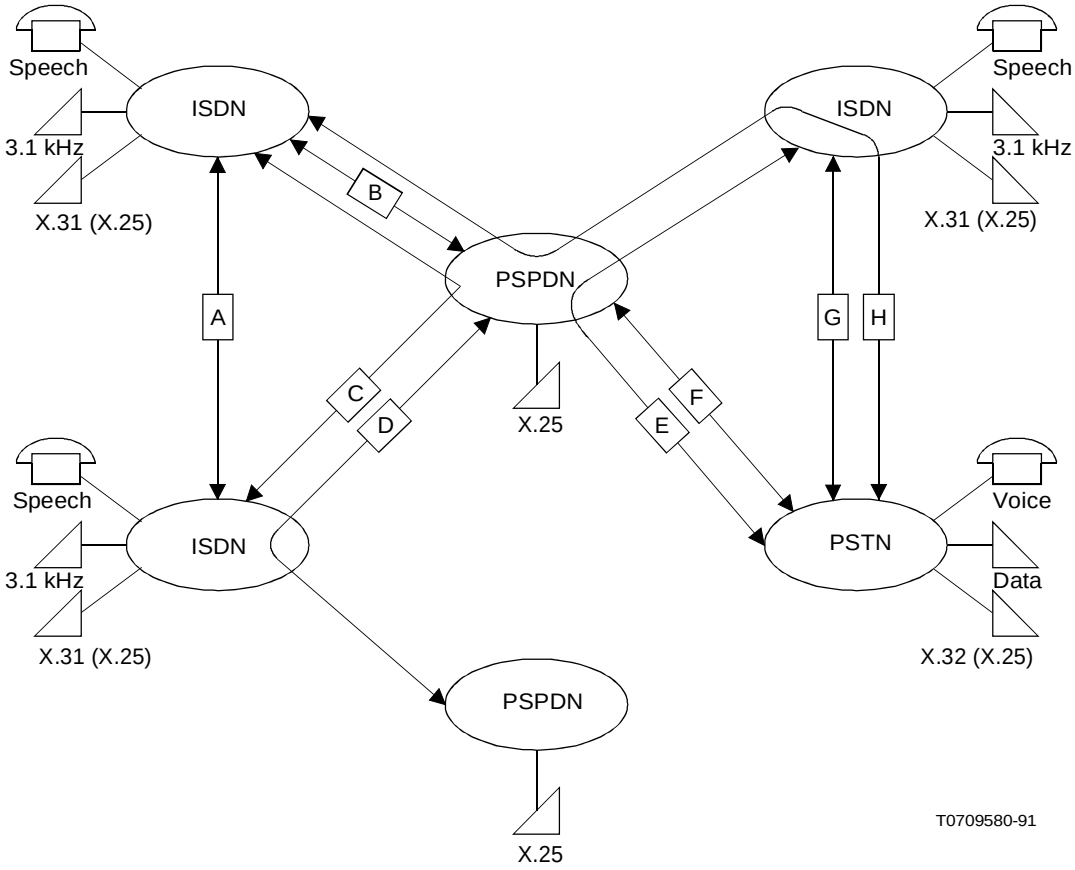

FIGURE 1
Scenarios for interworking

The following is a listing that describes the links associated with each interworking figure.

LINK A	Figure	6
LINK B	Figures	9, 10, 11, 12, 25, 26
LINK C	Figures	14, 15, 16, 17, 18
LINK D	Figure	13
LINK E	Figures	19, 20, 21, 22
LINK F	Figures	7, 8, 27, 28
LINK G	Figures	2, 3, 4, 5
LINK H	Figures	23, 24

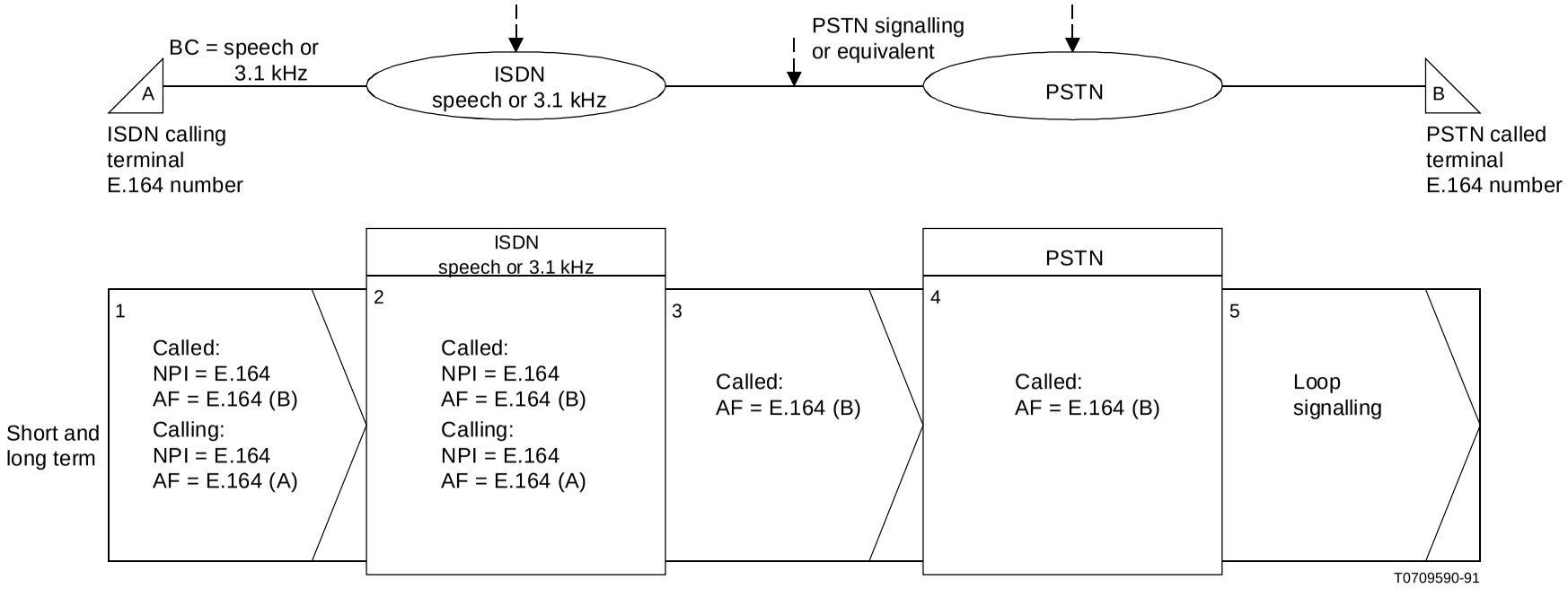

Note 1 – This scenario is single stage dialling.

Note 2 – If the ISDN calling terminal is a V-Series terminal used with a terminal adapter, then BC = 3.1 kHz.

FIGURE 2

Bearer capability interworking from an ISDN to a PSTN for voice services

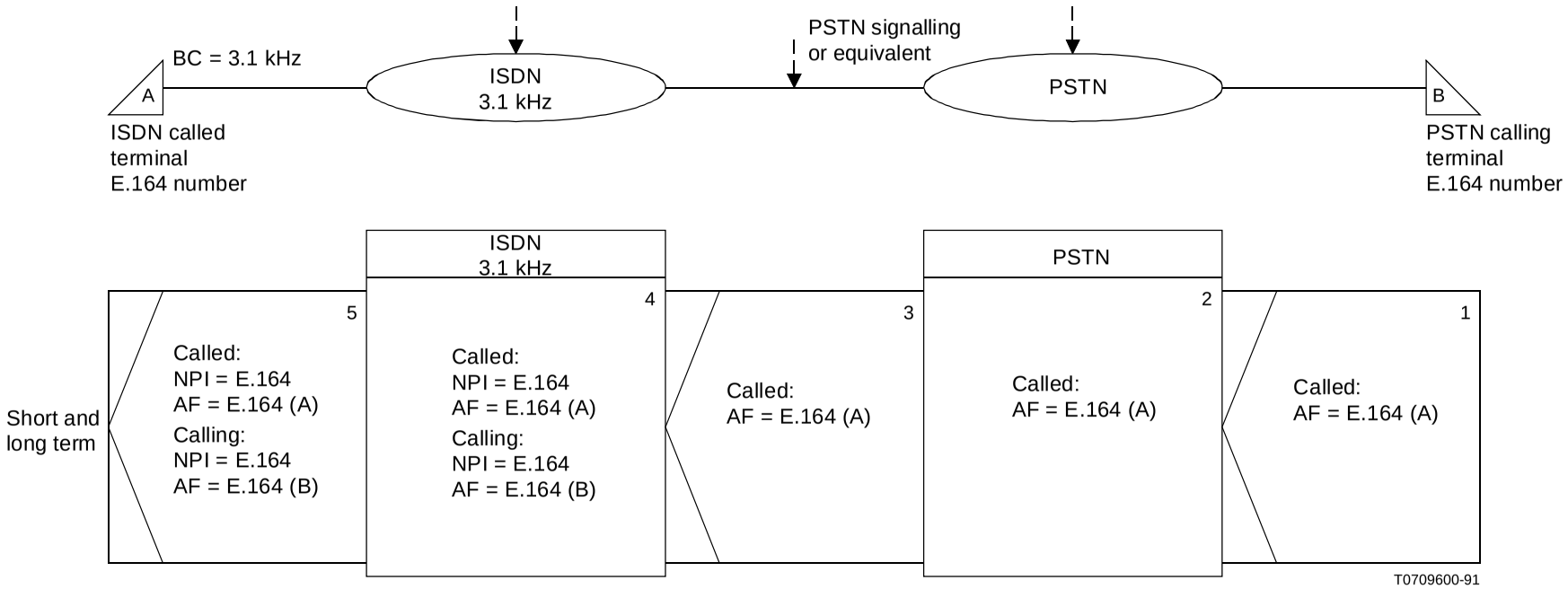

Note 1 – This scenario is single stage dialling.

Note 2 – The ISDN terminal may be a V-Series terminal used with a terminal adapter.

FIGURE 3

Bearer capability interworking from a PSTN to an ISDN for voice services

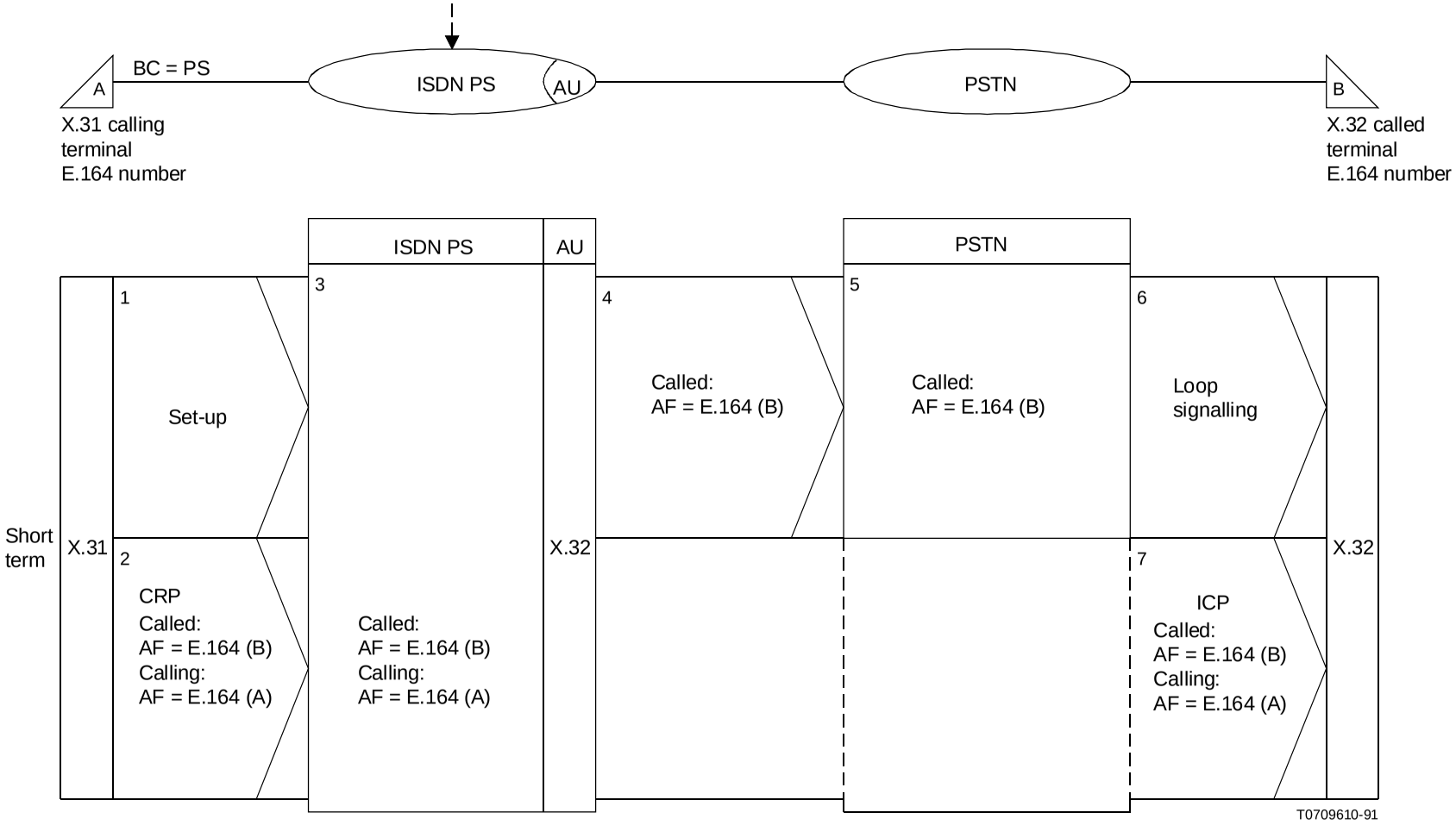

Note 1 – This scenario is single stage dialling.

Note 2 – Steps 4, 5 and 6 are not used when a circuit is already established.

Note 3 – Step 1 is not used when a circuit is already established.

Note 4 – X.32-like access from an ISDN PS to a PSTN is not presently defined in CCITT Recommendations. This is for urgent study by Study Groups VII and XVIII.

FIGURE 4

Bearer capability interworking from an ISDN to a PSTN for packet data services

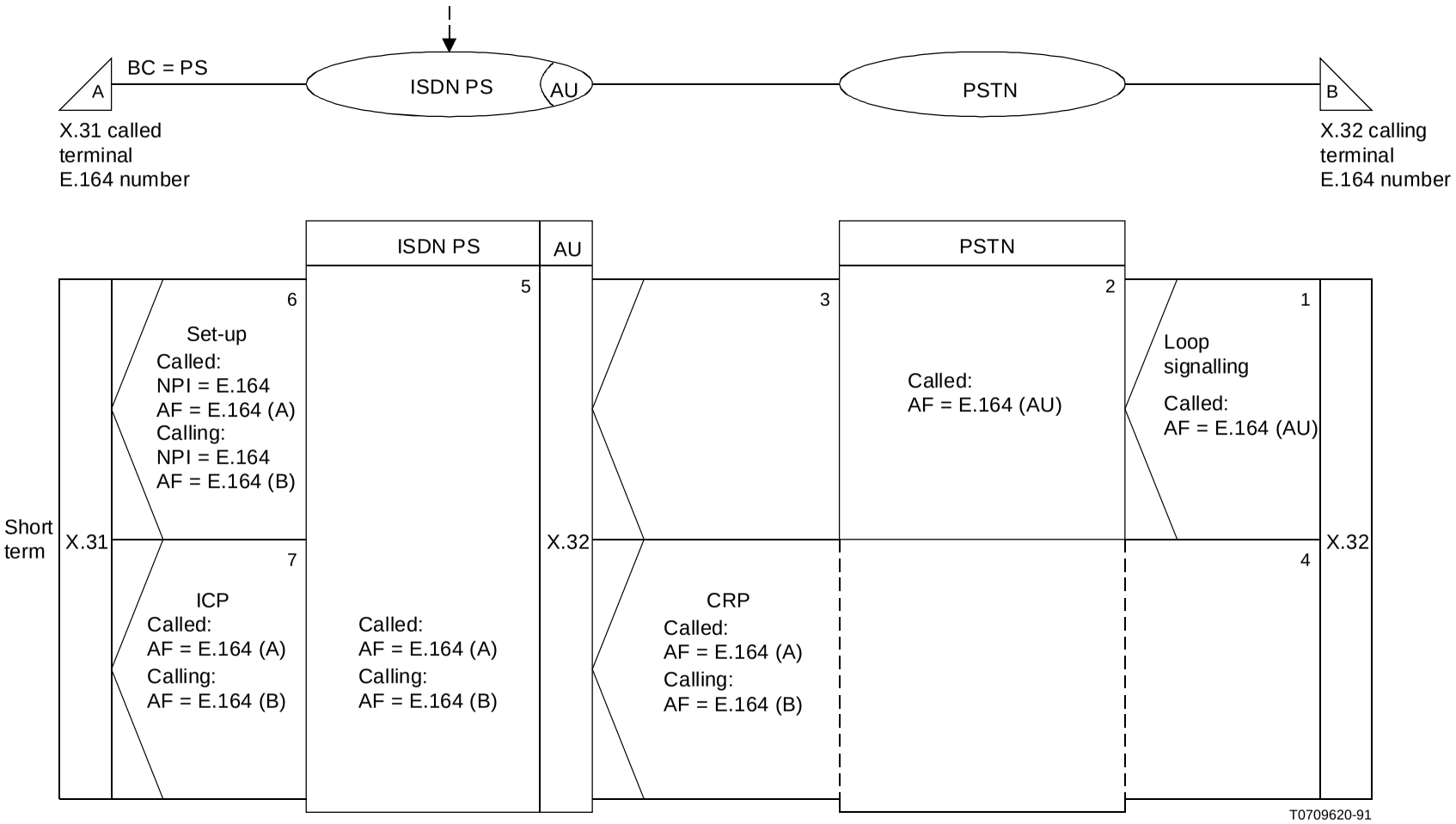

Note 1 – This scenario is double stage dialling.

Note 2 – Steps 1, 2 and 3 are not used when a circuit is already established.

Note 3 – Step 6 is not used when there is no call offering (see Recommendation X.31). When used, the calling address might not be used.

Note 4 – X.32-like access from a PSTN to an ISDN PS is not presently defined in CCITT Recommendations. This is for urgent study by Study Groups VII and XVIII.

FIGURE 5

Bearer capability interworking between a PSTN and an ISDN for packet data services

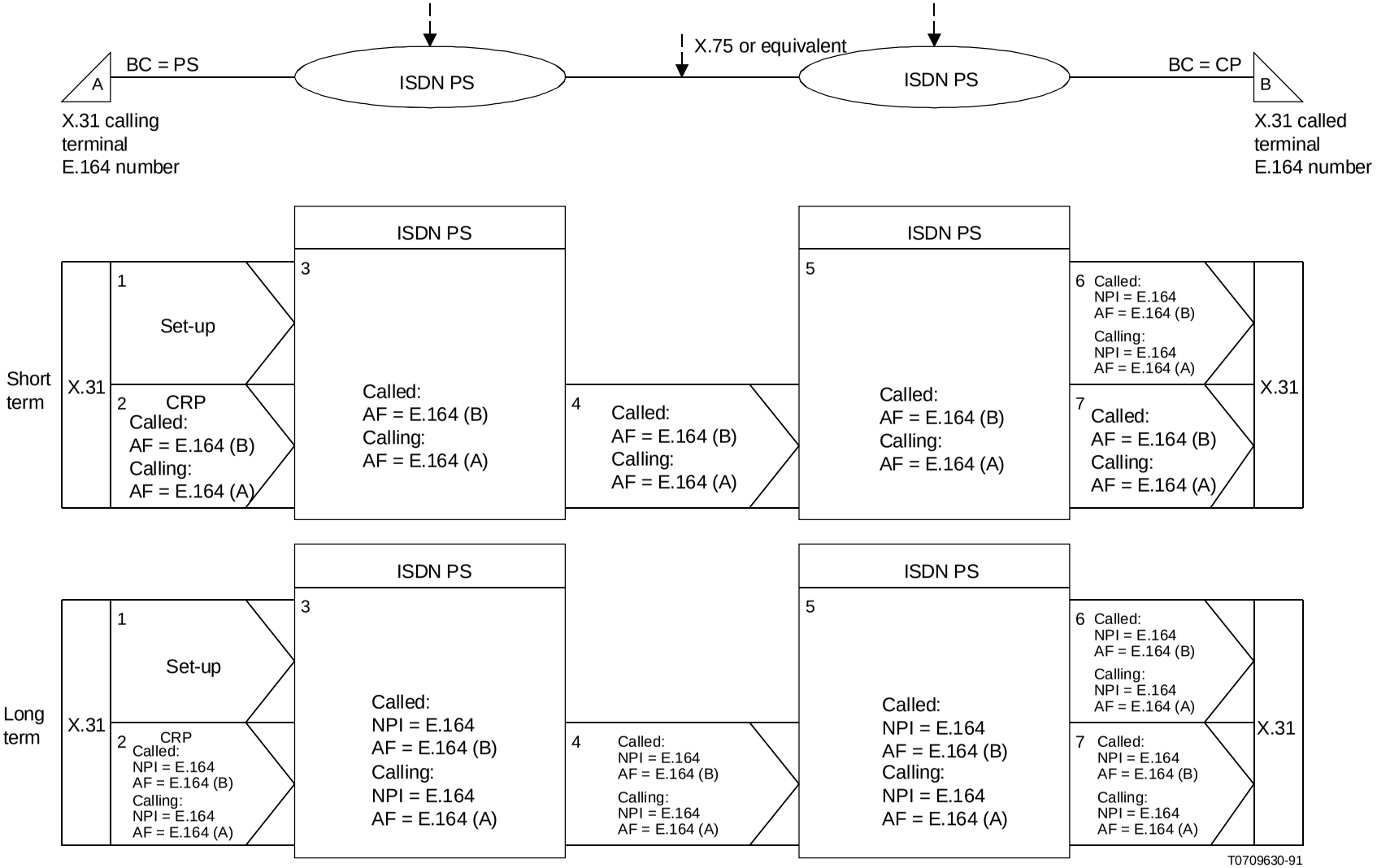

Note 1 – This figure is symmetrical and a call from B to A is made according to the same procedures.

Note 2 – This scenario is single stage dialling.

Note 3 – Step 1 is not present when packet mode over the D-channel is used or when a B-channel is already established.

Note 4 – See Recommendation X.31 for further details.

FIGURE 6

Bearer capability interworking between ISDNs for packet data services

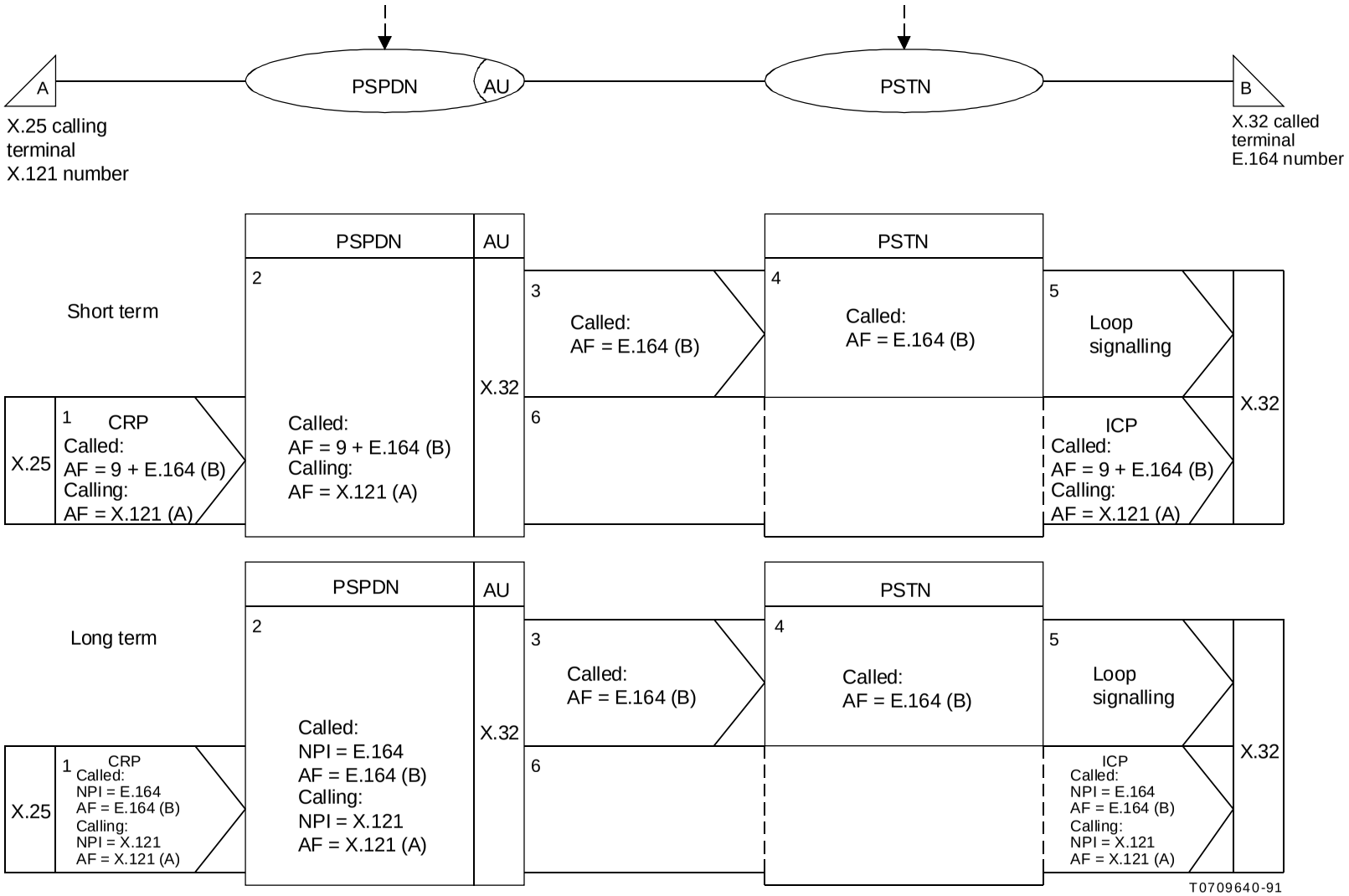

Note 1 – This scenario is single stage dialling.

Note 2 – Steps 3, 4 and 5 are not used when a circuit is already established.

FIGURE 7

Interworking from a PSPDN to a PSTN for the provision of X.32 service

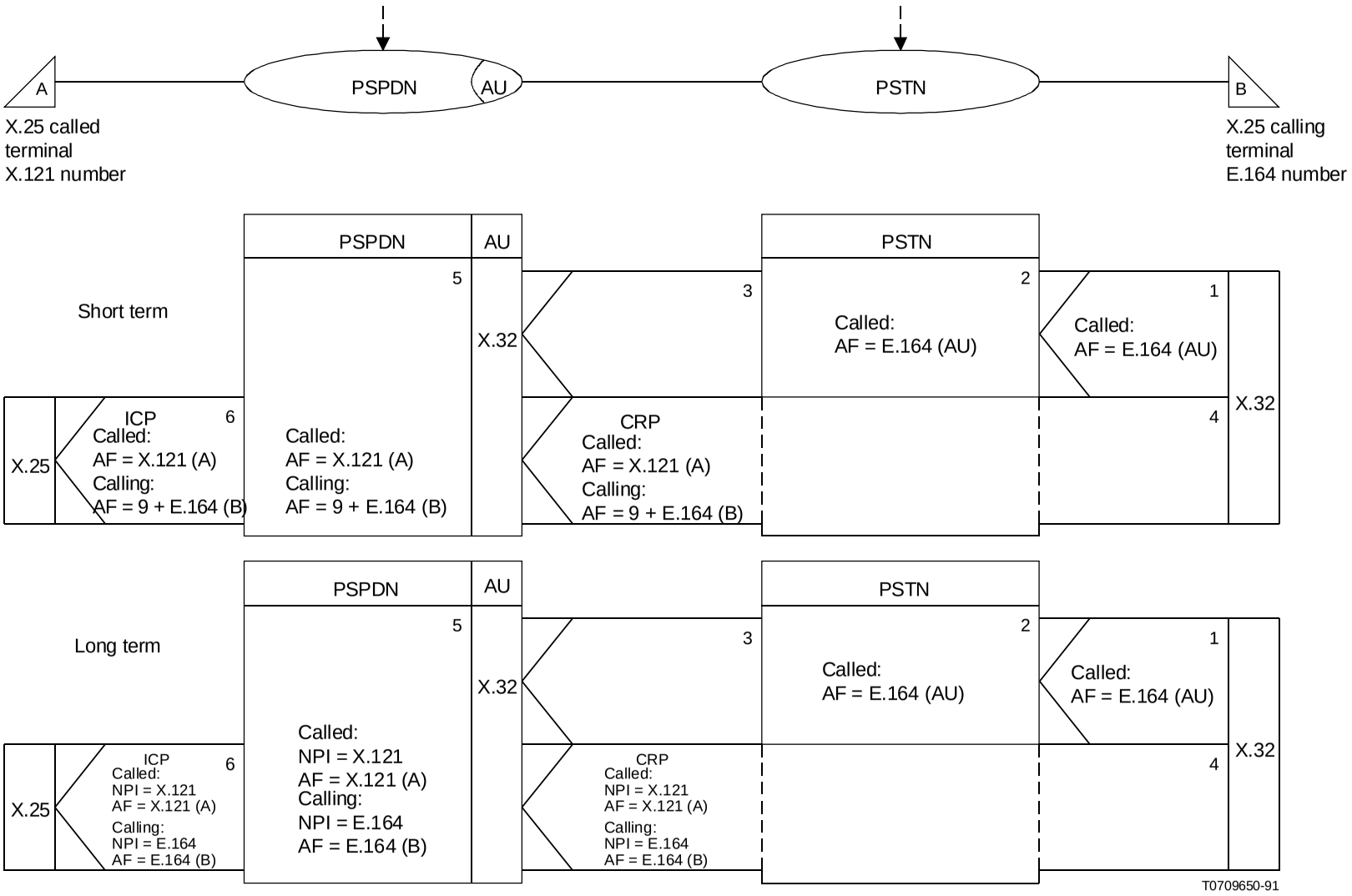

Note 1 – This scenario is double stage dialling.
Note 2 – Steps 1, 2 and 3 are not used when a circuit is already established.
Note 3 – Signalling System No. 7 is not excluded in the PSTN network.

FIGURE 8

Interworking from a PSTN to a PSPDN for the provision of X.32 service

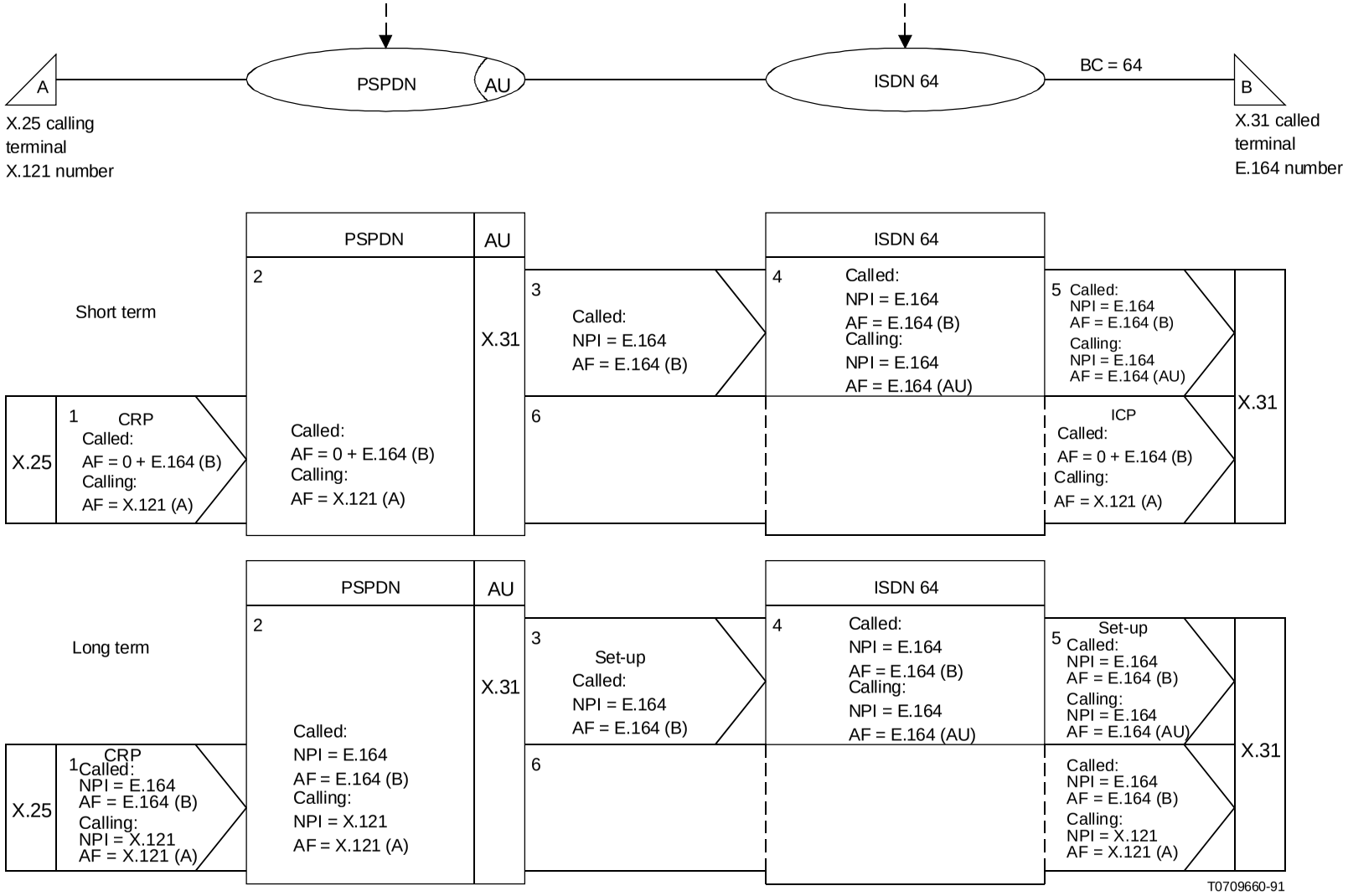

Note 1 – This scenario is single stage dialling.

Note 2 – Steps 3, 4 and 5 are not used when a circuit is already established.

FIGURE 9

Interworking from a PSPDN to an ISDN using X.31 procedures (BC = 64) in a case A environment

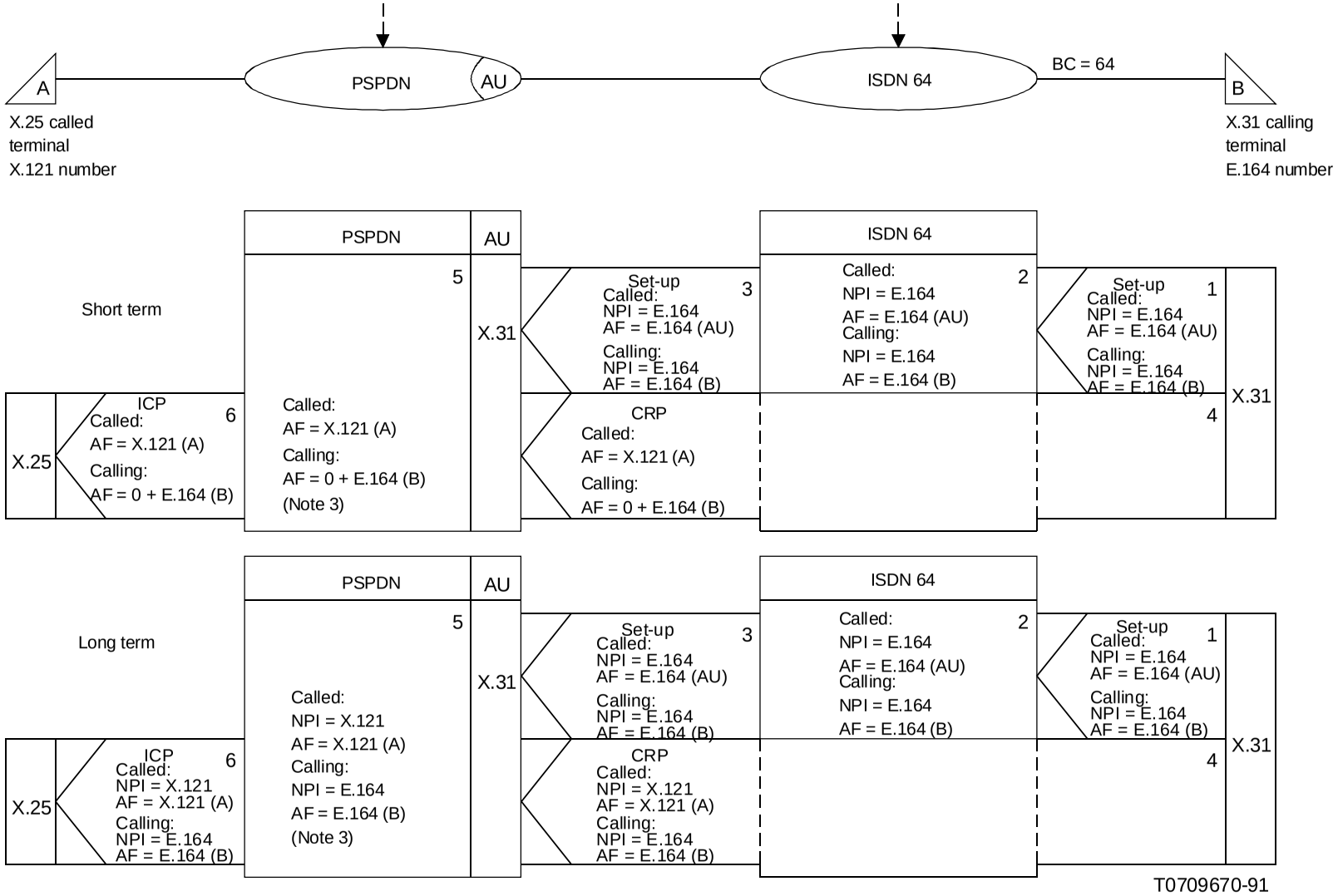

Note 1 – This scenario is double stage dialling.

Note 2 – Steps 1, 2 and 3 are not used when a circuit is already established.

Note 3 – The identity of B is a compound process of the available calling party identity and is for further study.

FIGURE 10

Interworking from an ISDN using X.31 procedures (BC = 64) in a case A environment to a PSPDN

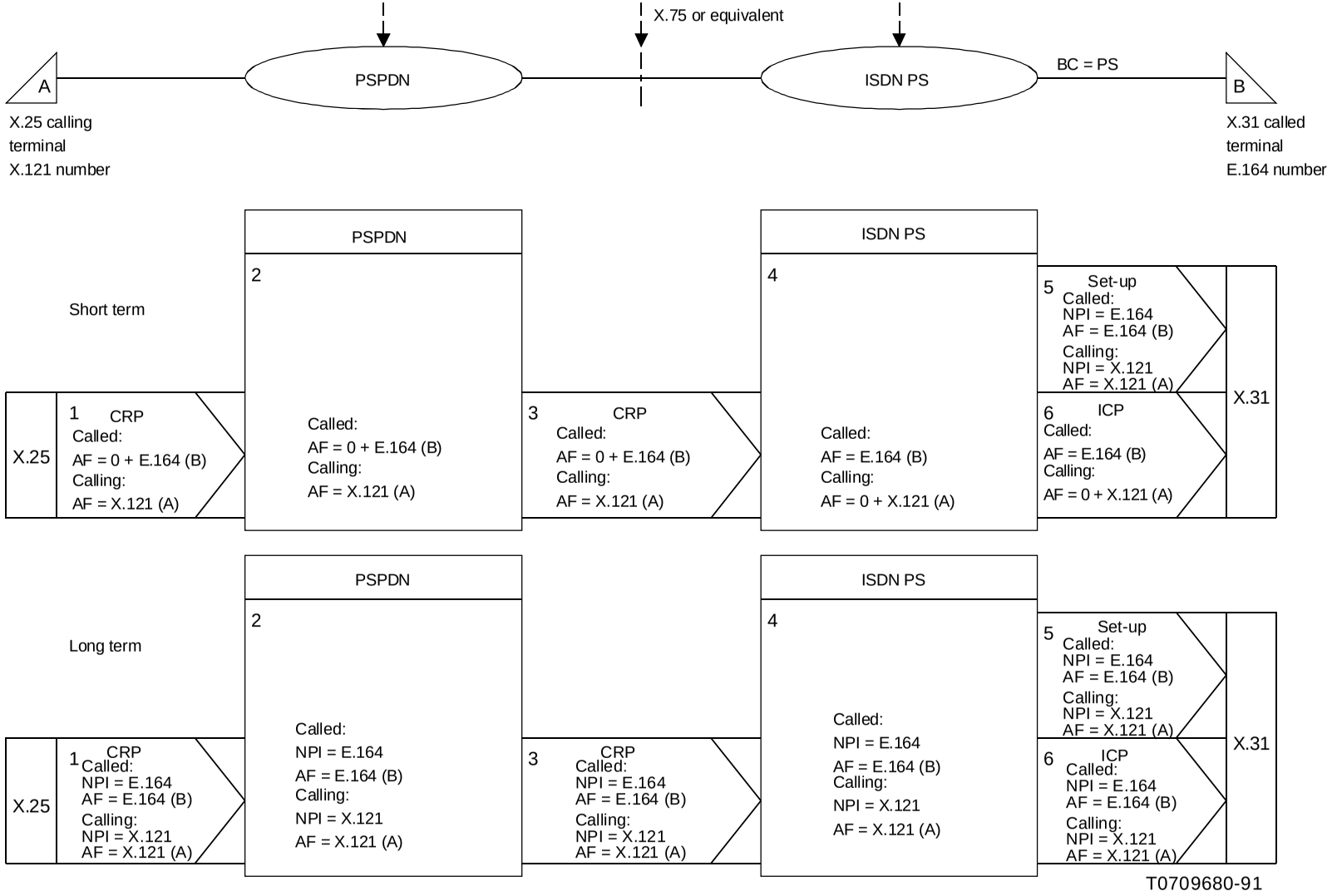

Note 1 – This scenario is single stage dialling.

Note 2 – Step 5 is not used when there is no call offering (see Recommendation X.31). When used the calling address might not be present.

Note 3 – See Recommendation X.31 for further details.

FIGURE 11

Interworking from a PSPDN to an ISDN using X.31 procedures (BC = PS) in a case B environment

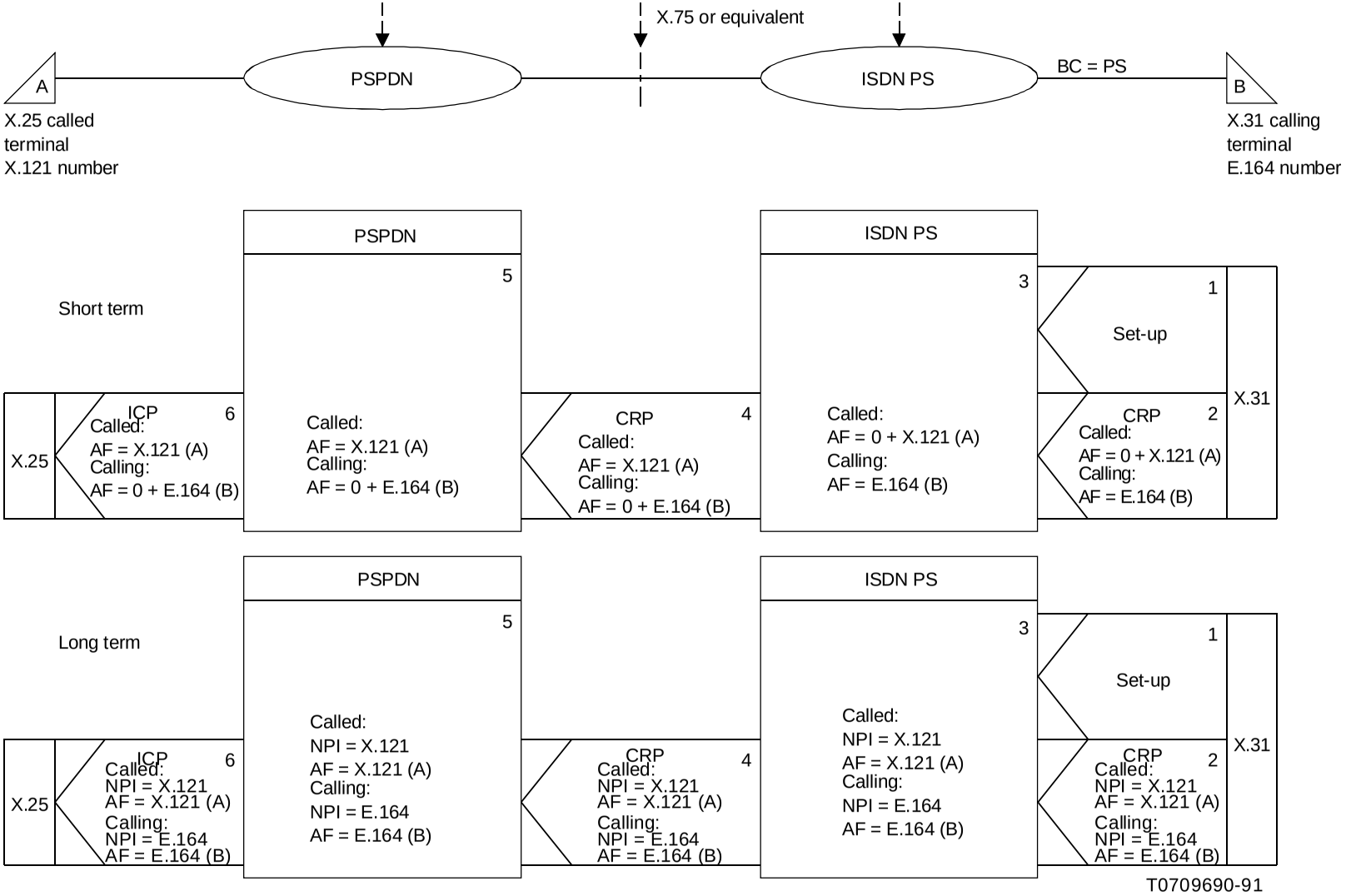

Note 1 – This scenario is single stage dialling.

Note 2 – Step 1 is not present when packet mode over the D-channel is used or when a B-channel is already established.

Note 3 – See Recommendation X.31 for further details.

FIGURE 12

Interworking from an ISDN using X.31 procedures (BC = PS) in a case B environment to a PSPDN

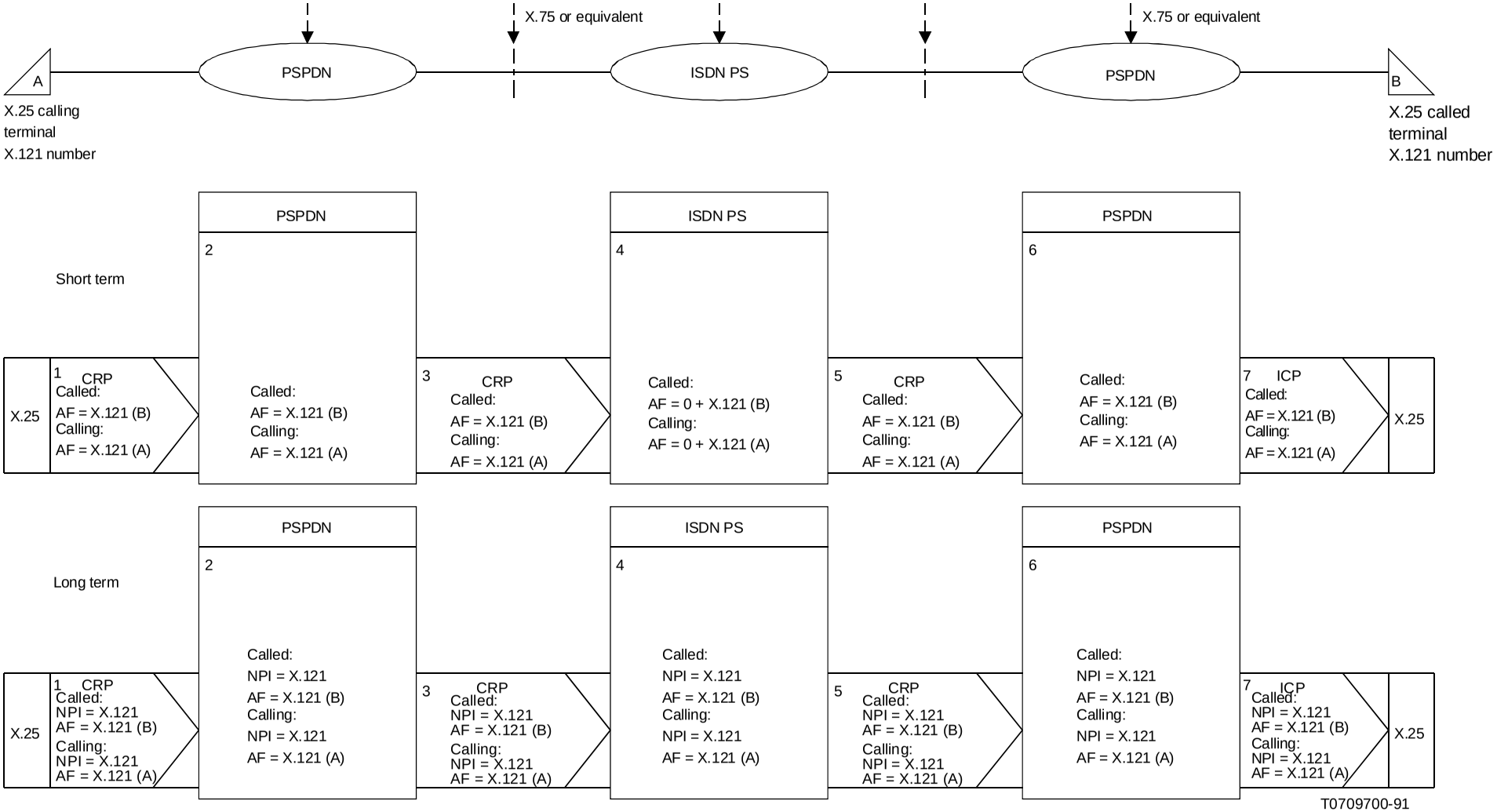

Note 1 – This scenario is single stage dialling.

Note 2 – This figure is symmetrical and a call from B to A is made according to the same procedures.

FIGURE 13

Interworking from a PSPDN to another PSPDN with an ISDN (BC = PS) as a transit network

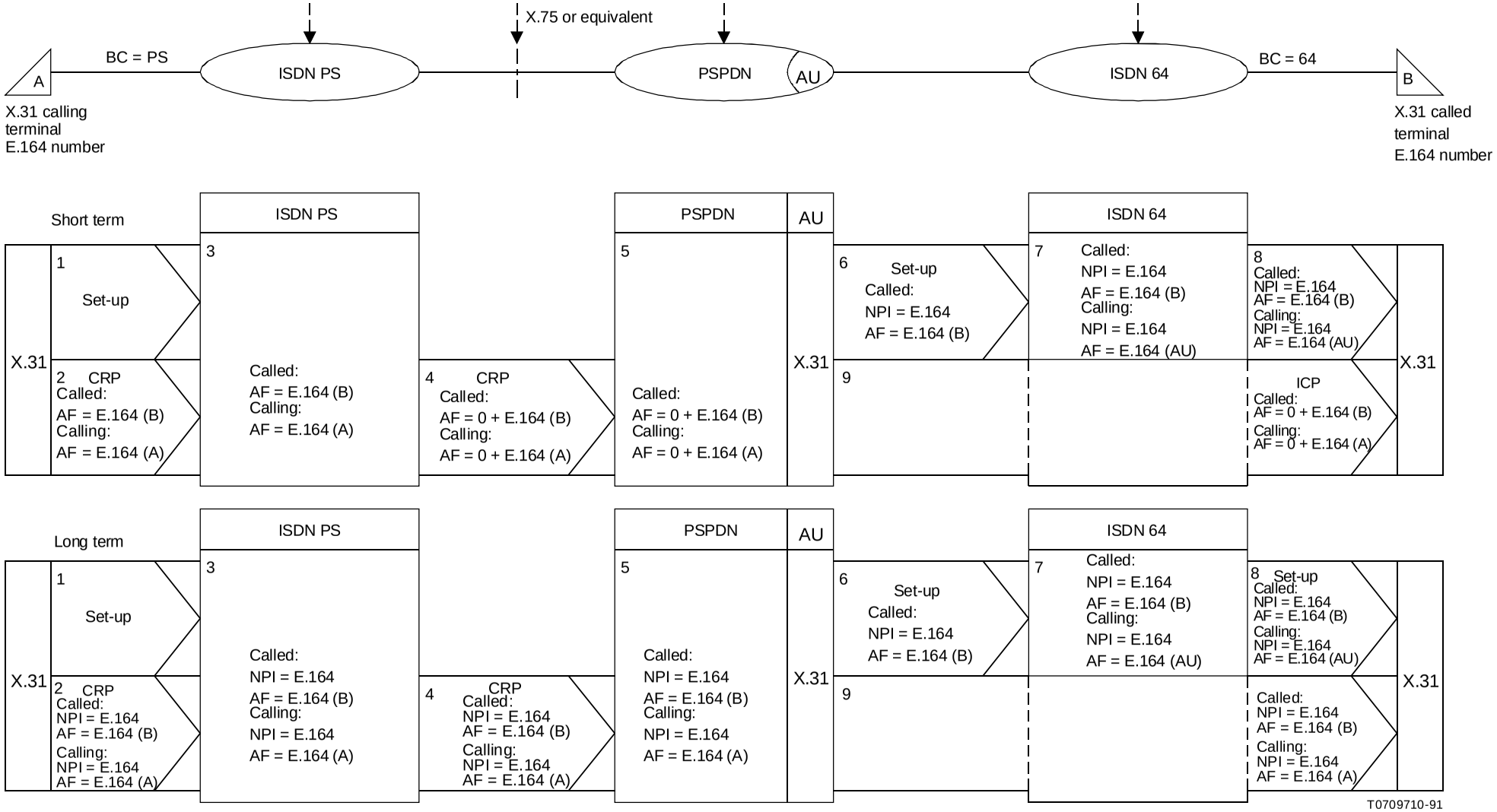

Note 1 – This scenario is single stage dialling.

Note 2 – Step 1 is not present when packet mode over the D-channel is used or when a B-channel is already established.

Note 3 – Steps 6, 7 and 8 are not used when a circuit is already established.

FIGURE 14

Interworking from an ISDN using X.31 procedures (BC = PS) to an ISDN using X.31 procedures (BC = 64) with a PSPDN as a transit network

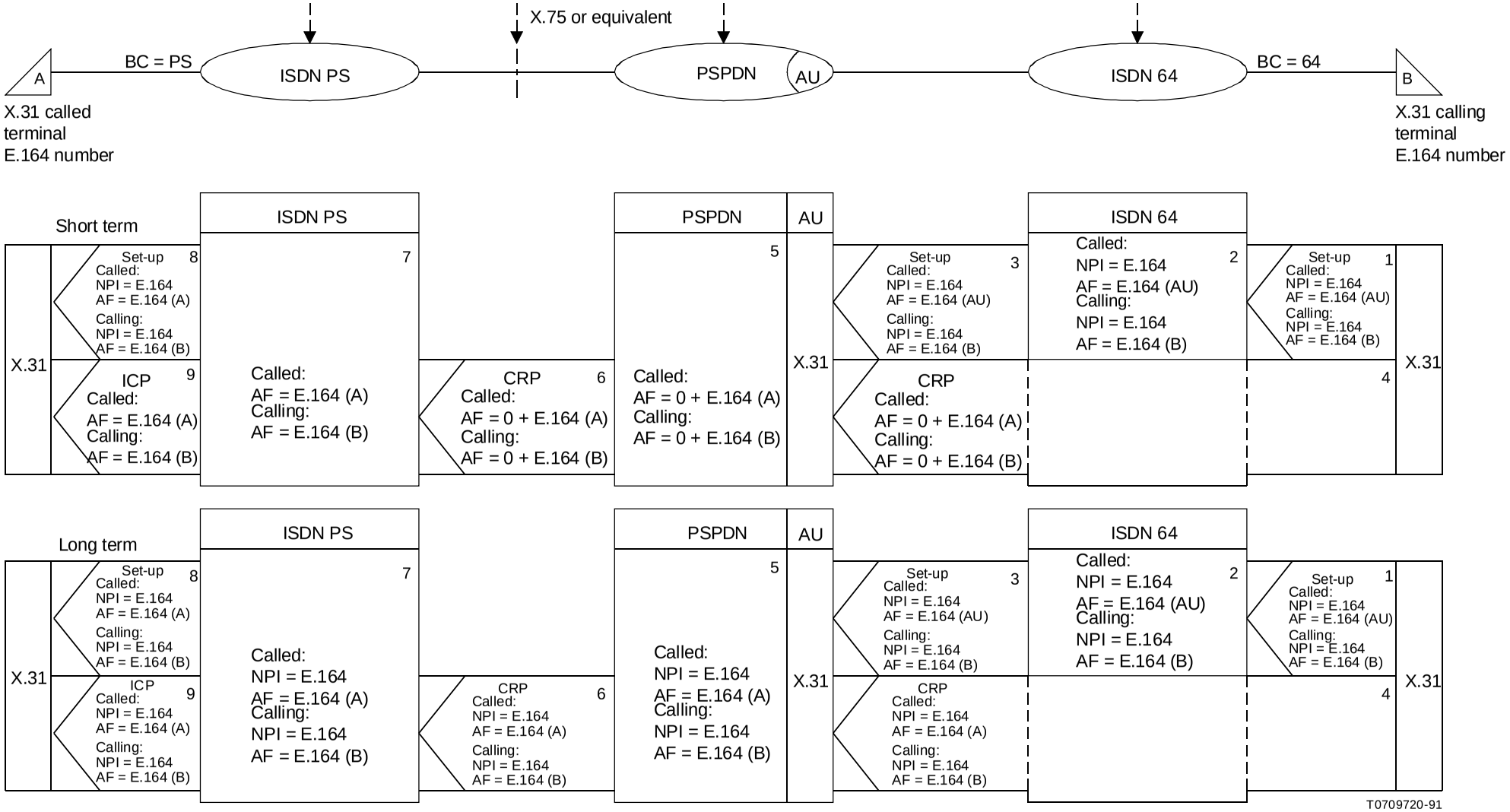

Note 1 – This scenario is double stage dialling.

Note 2 – Steps 1, 2 and 3 are not used when a circuit is already established.

Note 3 – Step 8 is not used when there is no call offering (see Recommendation X.31). When used the calling address may not be present.

FIGURE 15

Interworking from an ISDN using X.31 procedures (BC = 64) to an ISDN using X.31 procedures (BC = PS) with a PSPDN as a transit network

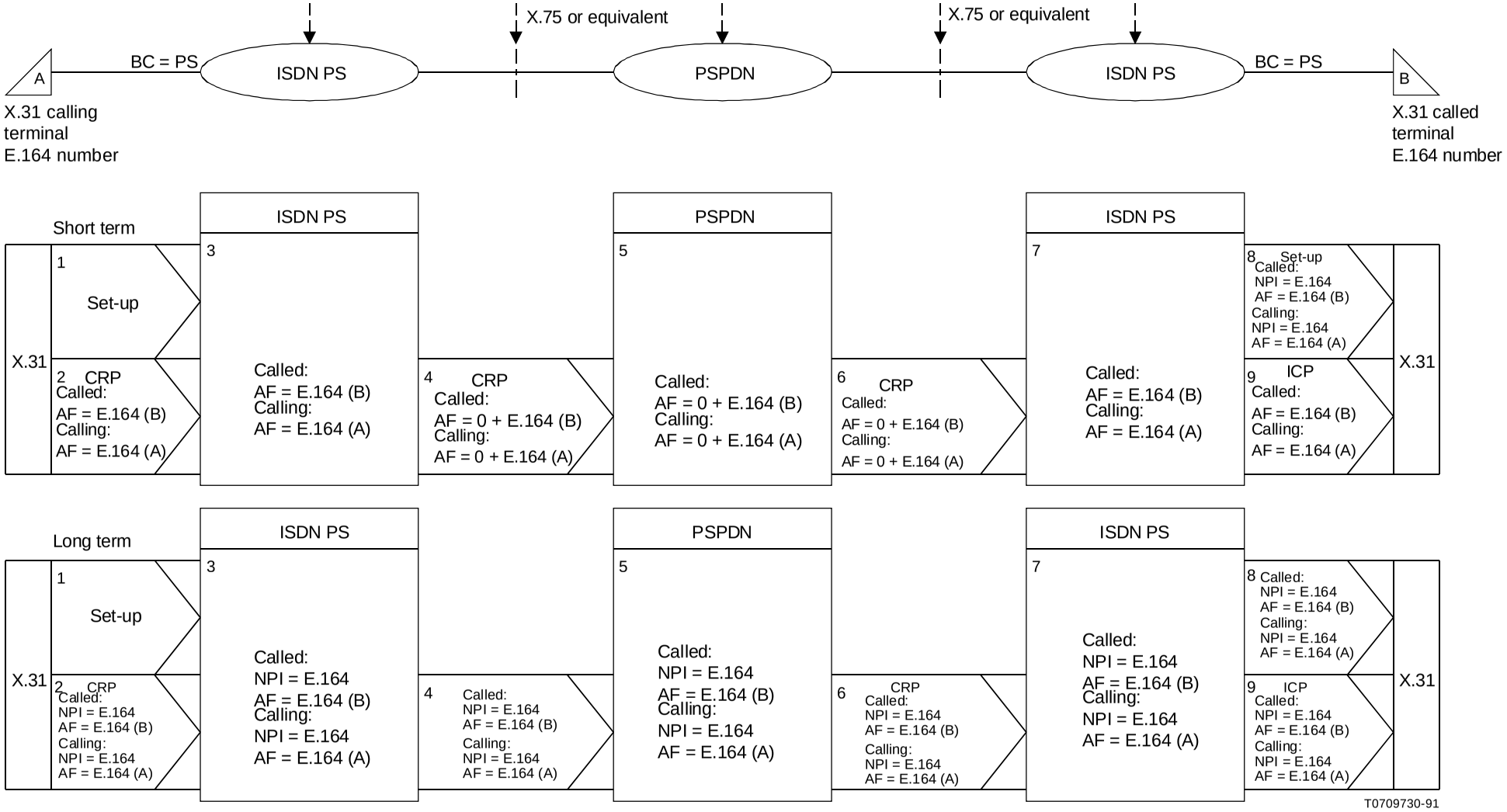

Note 1 – This figure is symmetrical and a call from B to A is made according to the same procedure.

Note 2 – This scenario is single stage dialling.

Note 3 – Step 1 is not present when packet mode over the D-channel is used or when a B-channel is already established.

Note 4 – Step 8 is not used when there is no call offering (see Recommendation X.31). When used the calling address may not be present.

FIGURE 16

Interworking from an ISDN using X.31 procedures (BC = PS) to an ISDN using X.31 procedures (BC = PS) with a PSPDN as a transit network

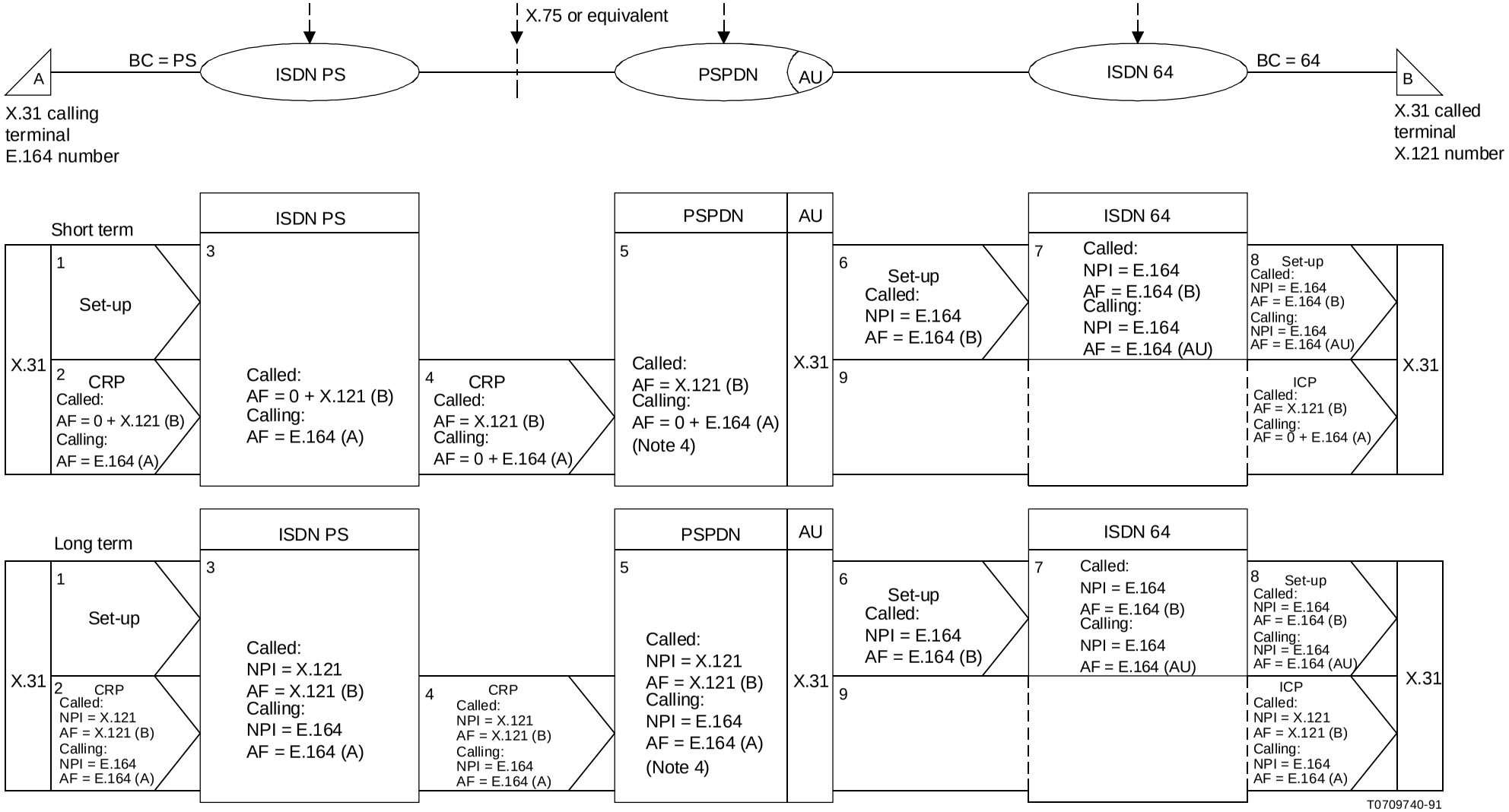

Note 1 – This scenario is single stage dialling.

Note 2 – Step 1 is not present when packet mode over the D-channel is used or when a B-channel is already established.

Note 3 – Steps 6, 7 and 8 might not be used when a circuit is already established.

Note 4 – The access unit (AU) has to achieve translation to obtain E.164 (B) from X.121 (B).

FIGURE 17

Interworking from an ISDN using X.31 procedures (BC = PS) (E.164 address) to an ISDN using X.31 procedures (BC = 64) (X.121 address) with a PSPDN as a transit network

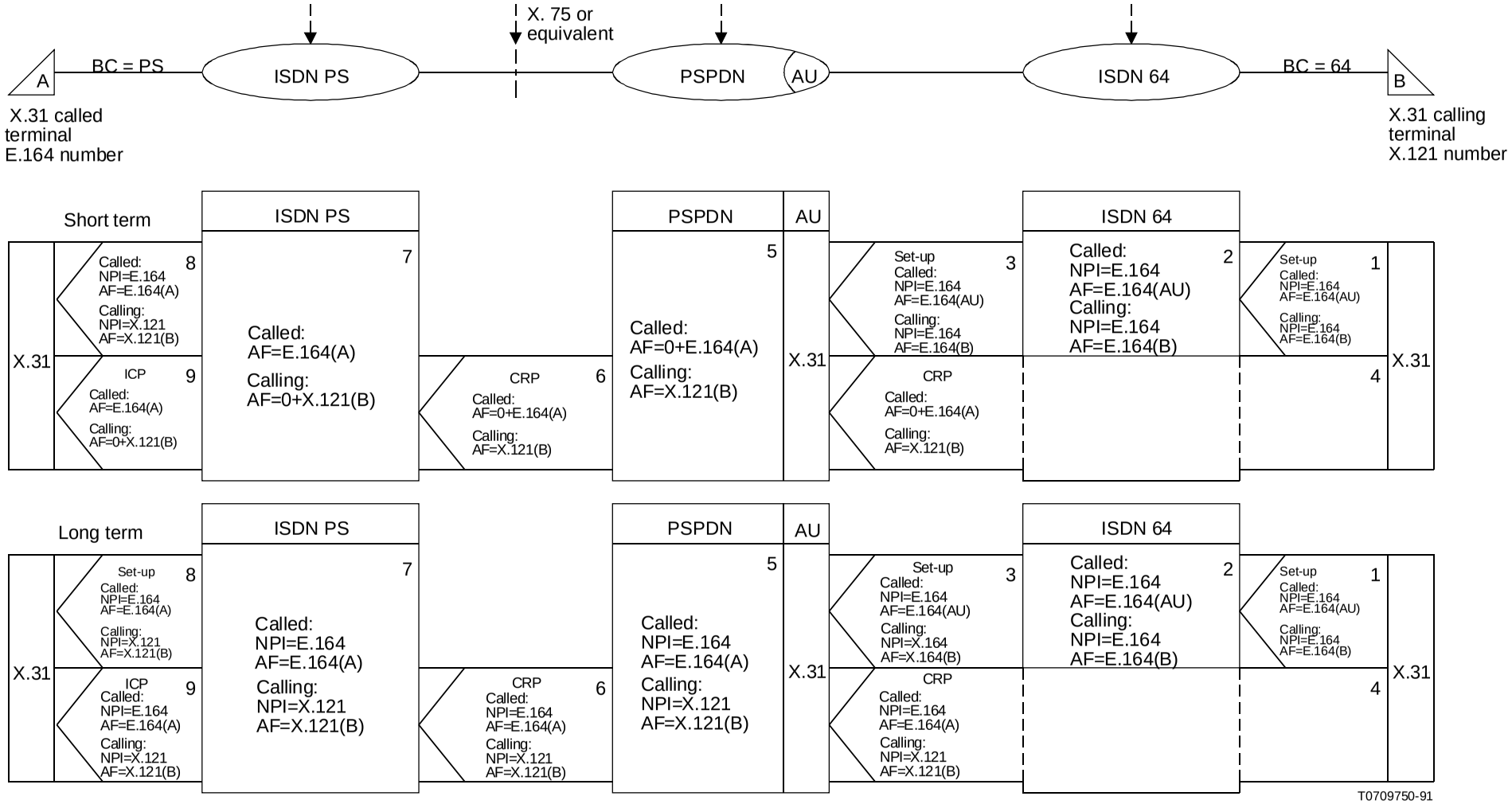

Note1–Thisscenarioisdoublestagedialling.

Note2–Steps1,2and3arenotusedwhenacircuitisalreadyestablished.

Note3–Step8isnotusedwhenthereisnocalloffering(seeRecommendationX.31).Whenusedthecallingaddressmightnotbepresent.

FIGURE18

Interworking from an ISDN using X.31 procedures (BC = 64) (X.121 address) to an ISDN using X.31 procedures (BC = PS) (E.164 address) with a PSPDN as a transit network

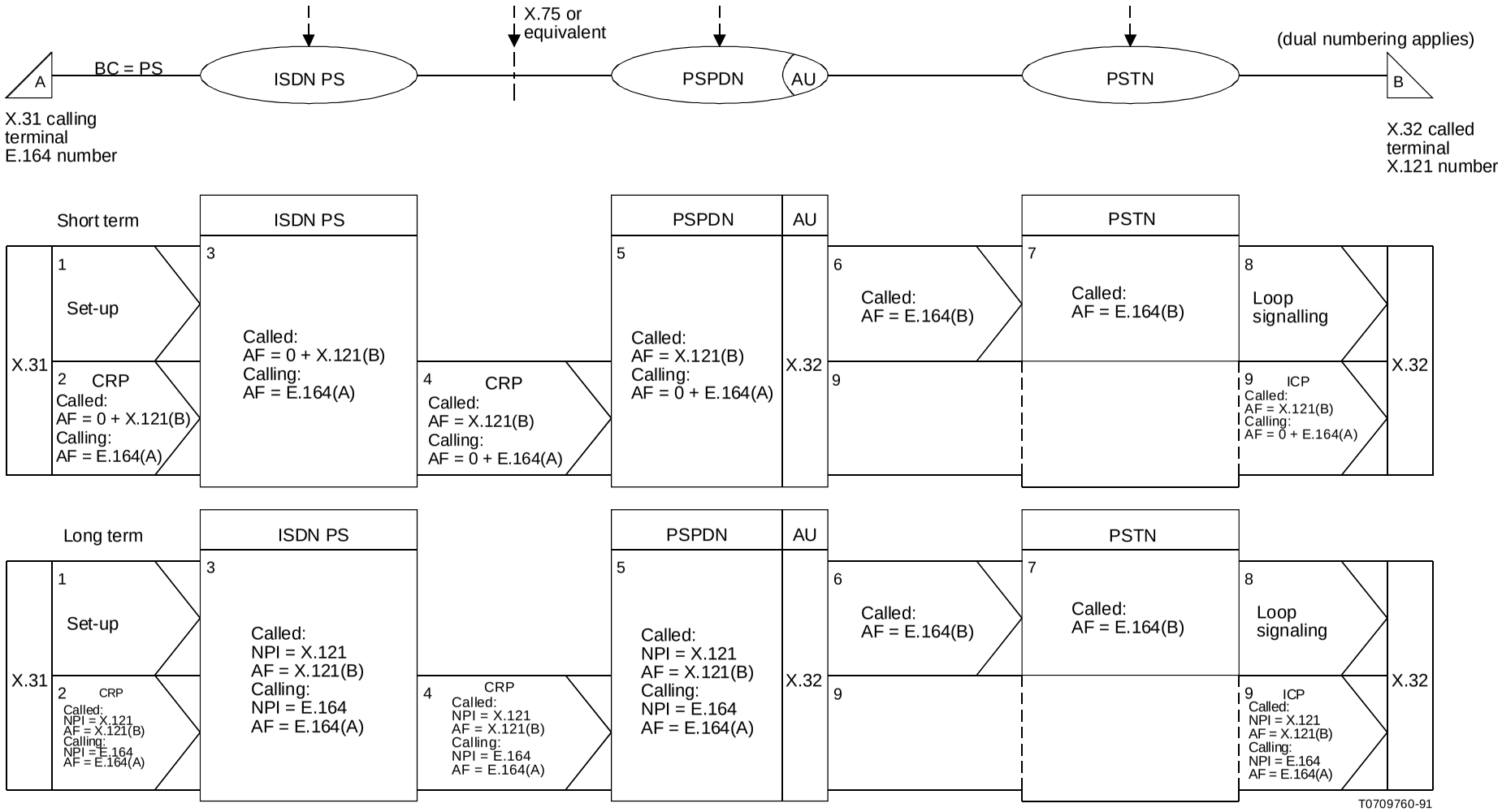

Note 1 – This scenario is single stage dialling.

Note 2 – The AU has to achieve some translation to obtain E.164(B) from X.121(B).

Note 3 – Step 1 is not present when packet mode over the D-channel is used or when a B-channel is already established.

Note 4 – Steps 6, 7 and 8 are not used when there is no call offering (see Recommendation X.31). When used the calling address might not be present.

FIGURE 19

Interworking from an ISDN using X.31 procedures (BC = PS) to a PSTN for the provision of X.32 service (X.121 address) with a PSPDN as a transit network

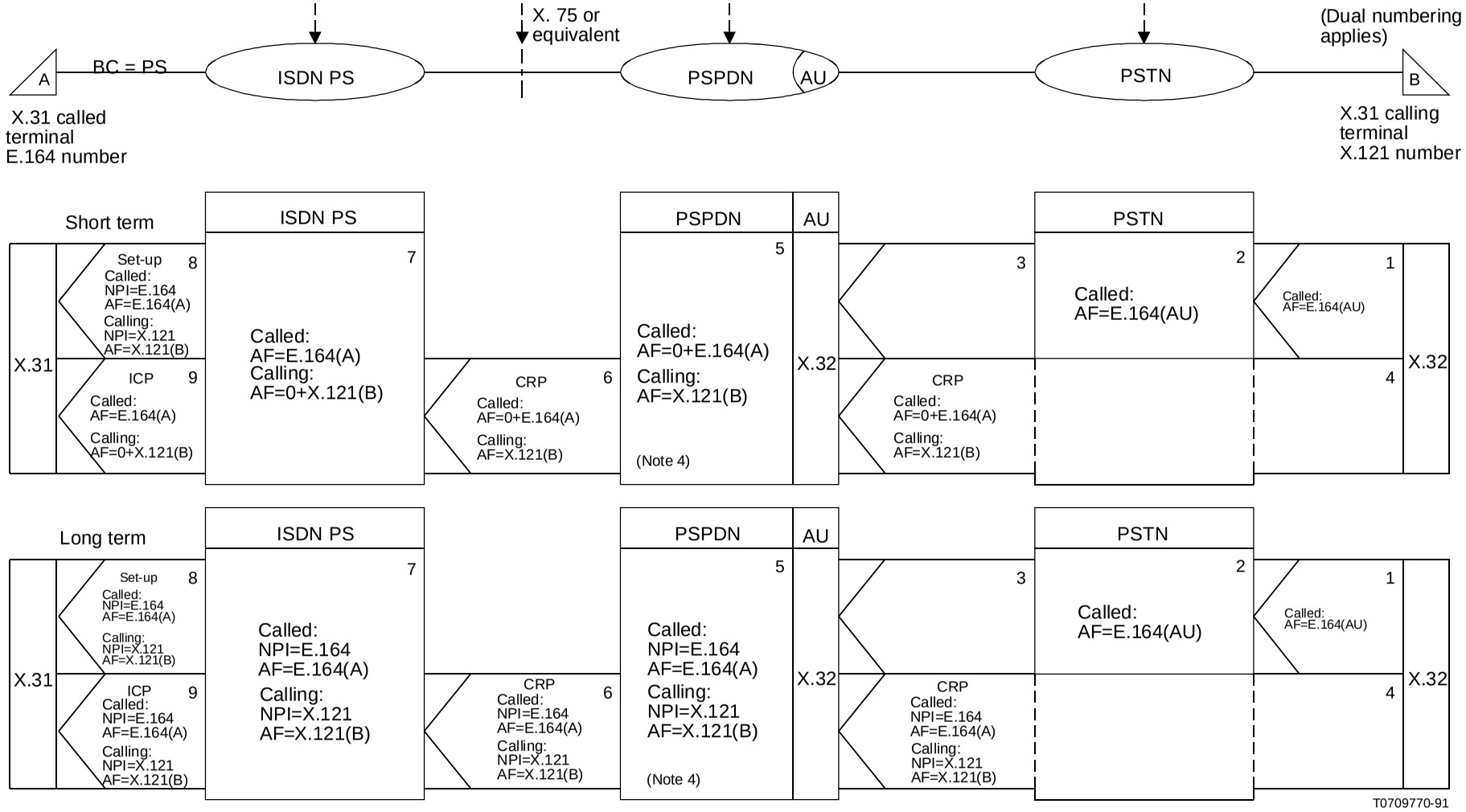

Note 1 – This scenario is double stage dialling.

Note 2 – Steps 1, 2 and 3 are not used when a circuit is already established.

Note 3 – Step 8 is not used when there is no call offering (see Recommendation X.31). When used the calling address might not be present.

Note 4 – The identity of B is a compound process of the available calling party and is for further study.

FIGURE 20

Interworking from a PSTN using X.32 procedures (X.121 address) to an ISDN using X.31 procedures (BC = PS) (E.164 address), with a PSPDN as a transit network

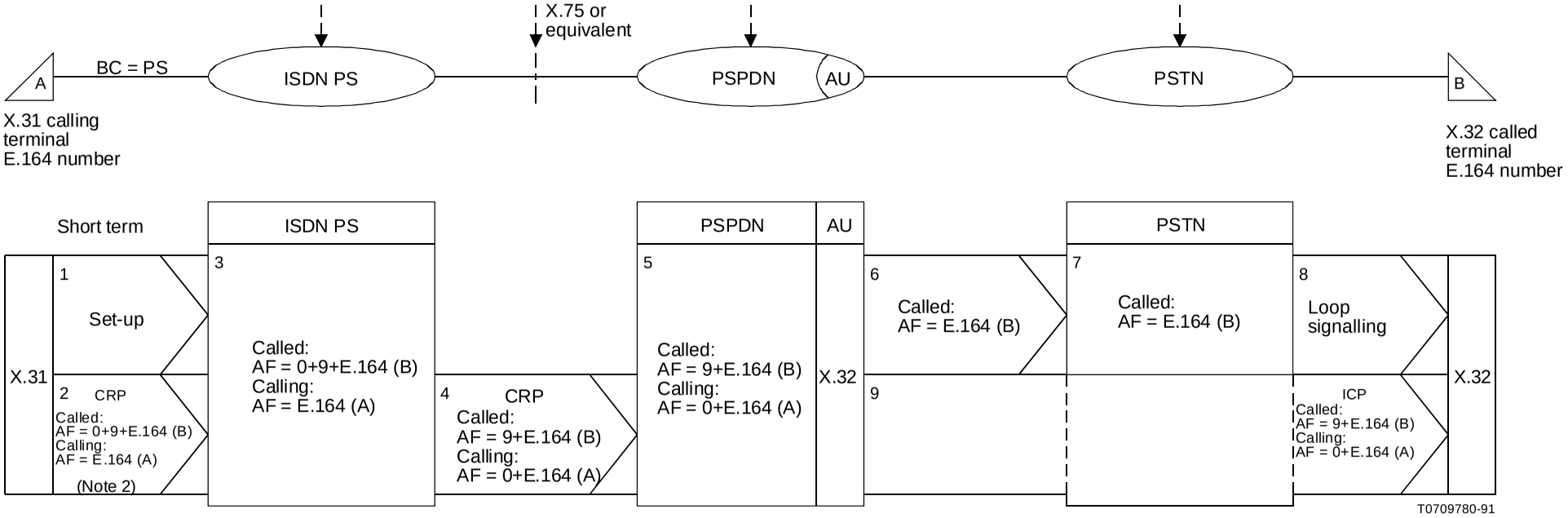

Note 1 – This scenario is single stage dialling.

Note 2 – The reverse dialling principles are not observed.

Note 3 – Step 1 is not present when packet mode over the D-channel is used or when a B-channel is already established.

Note 4 – Steps 6, 7 and 8 are not used when a circuit is already established.

Note 5 – Based upon the NPI method, no long-term approach is technically feasible.

FIGURE 21

Interworking from an ISDN using X.31 procedures (BC = PS) to a PSTN for the provision of X.32 service with a PSPDN as a transit network

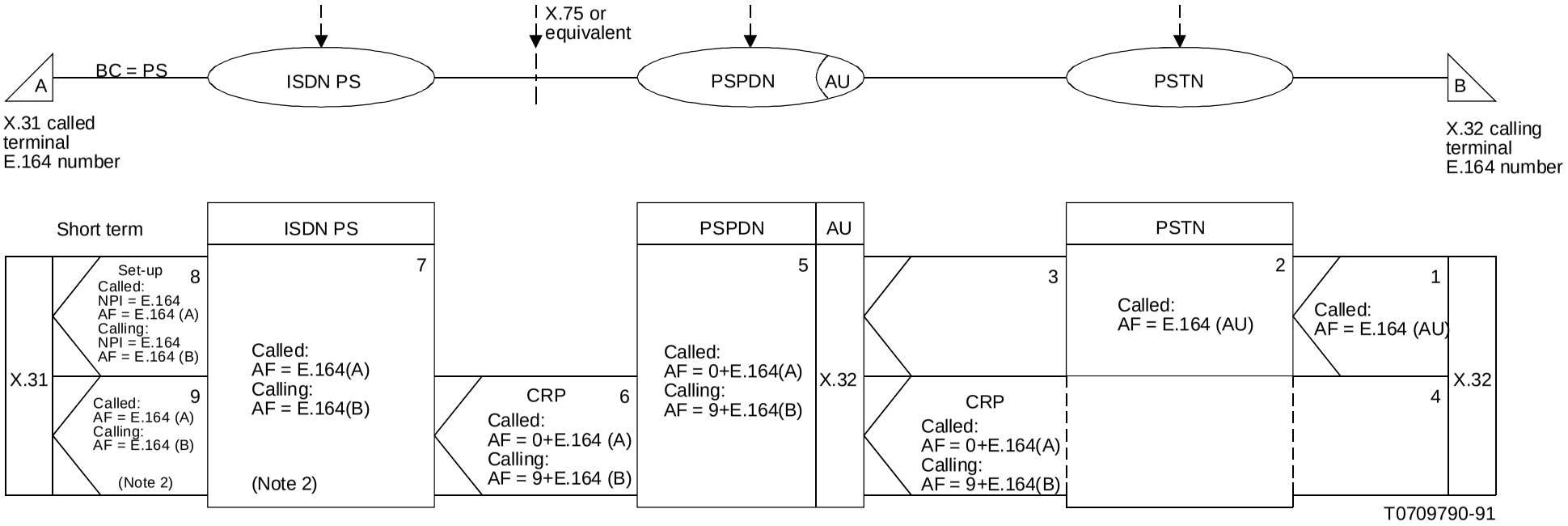

Note 1 – This scenario is double stage dialling.

Note 2 – The reverse dialling principles are not observed is this example. However, some ISDN PS may be able to generate and offer to the called party the concatenated escape codes 0 + 9 in the calling address to fulfil the reverse dialling principles.

Note 3 – Steps 1, 2 and 3 are not used when a circuit is already established.

Note 4 – Steps 8 is not used when there is no call offering (see Recommendation X.31). When used the calling address might not be present.

Note 5 – Based upon the NPI method, no long-term approach is technically feasible.

FIGURE 22

Interworking from a PSTN using X.32 procedures to an ISDN using X.31 procedures (BC = PS), with a PSPDN as a transit network

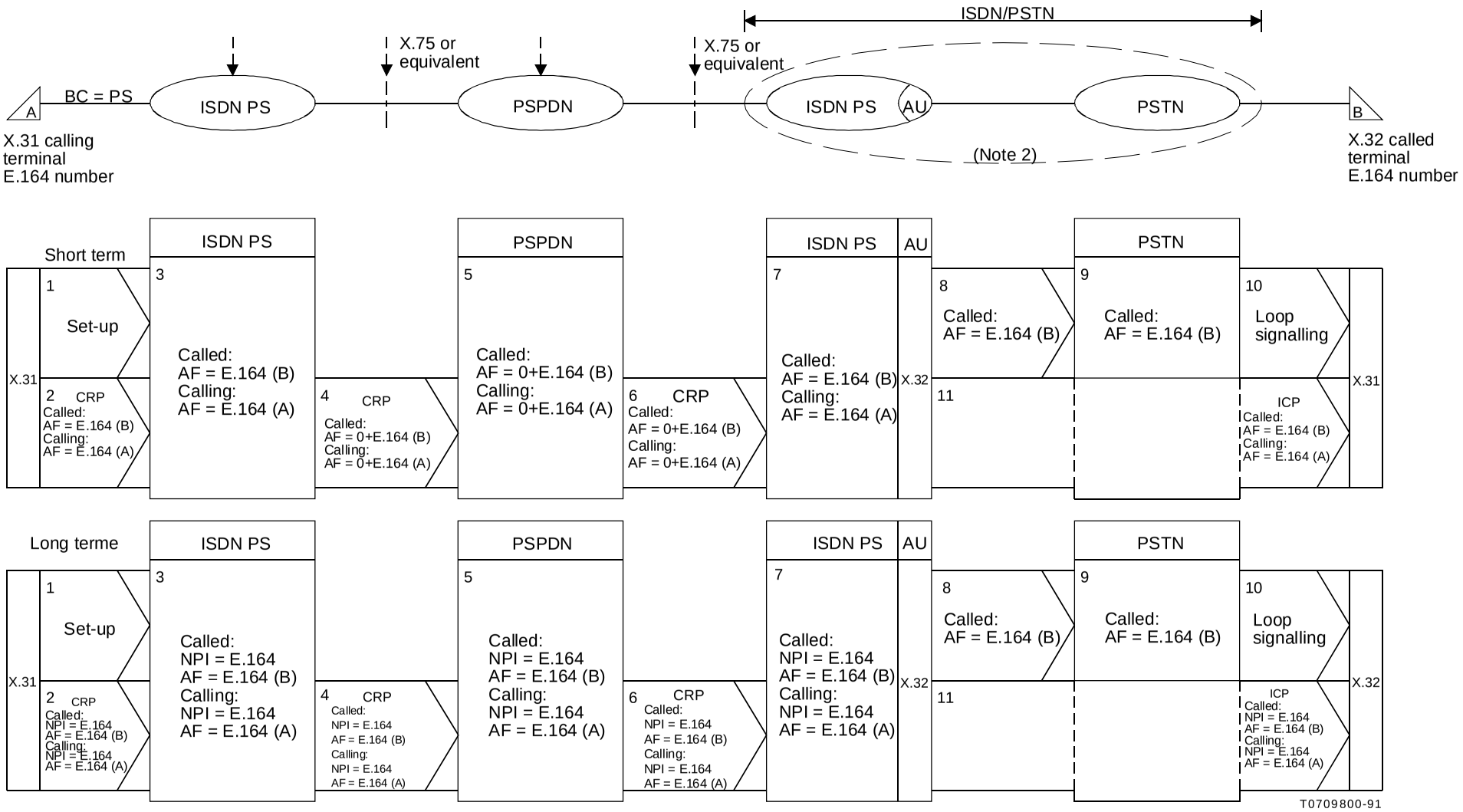

Note 1 – This scenario is single stage dialling.

Note 2 – X.32-like access from a ISDN PS to a PSTN is not presently defined in CCITT Recommendations. This is for urgent study by Study Groups VII and XVIII.

Note 3 – Step 1 is not used when a circuit is already established.

Note 4 – Steps 8, 9 and 10 are not used when a circuit is already established.

FIGURE 23

Interworking from an ISDN using X.31 procedures (BC = PS) to an ISDN using X.32-like procedures in conjunction with a PSTN, with a PSPDN as a transit network

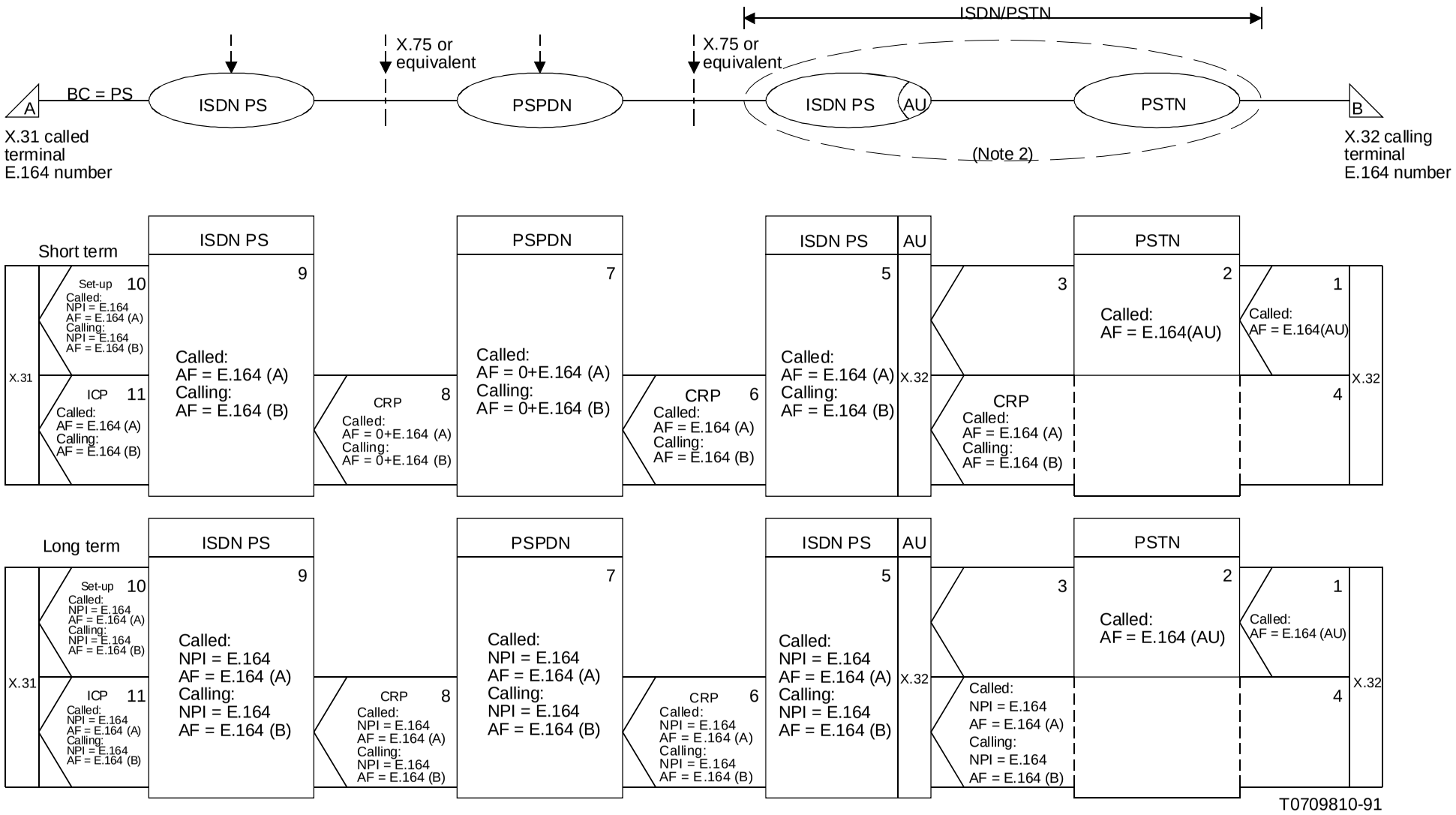

Note 1 – This scenario is double stage dialling.

Note 2 – X.32-like access from a PSTN to an ISDN PS is not presently defined in CCITT Recommendations. This is for urgent study by Study Groups VII and XVIII.

Note 3 – Steps 1, 2 and 3 are not used when a circuit is already established.

Note 4 – Step 10 is not used when there is no call offering (see Recommendation X.31), when used the calling address might not be present.

FIGURE 24

Interworking from a PSTN in conjunction with an ISDN using X.32-like procedures to an ISDN using X.31 procedures (BC = PS) with a PSPDN as a transit network

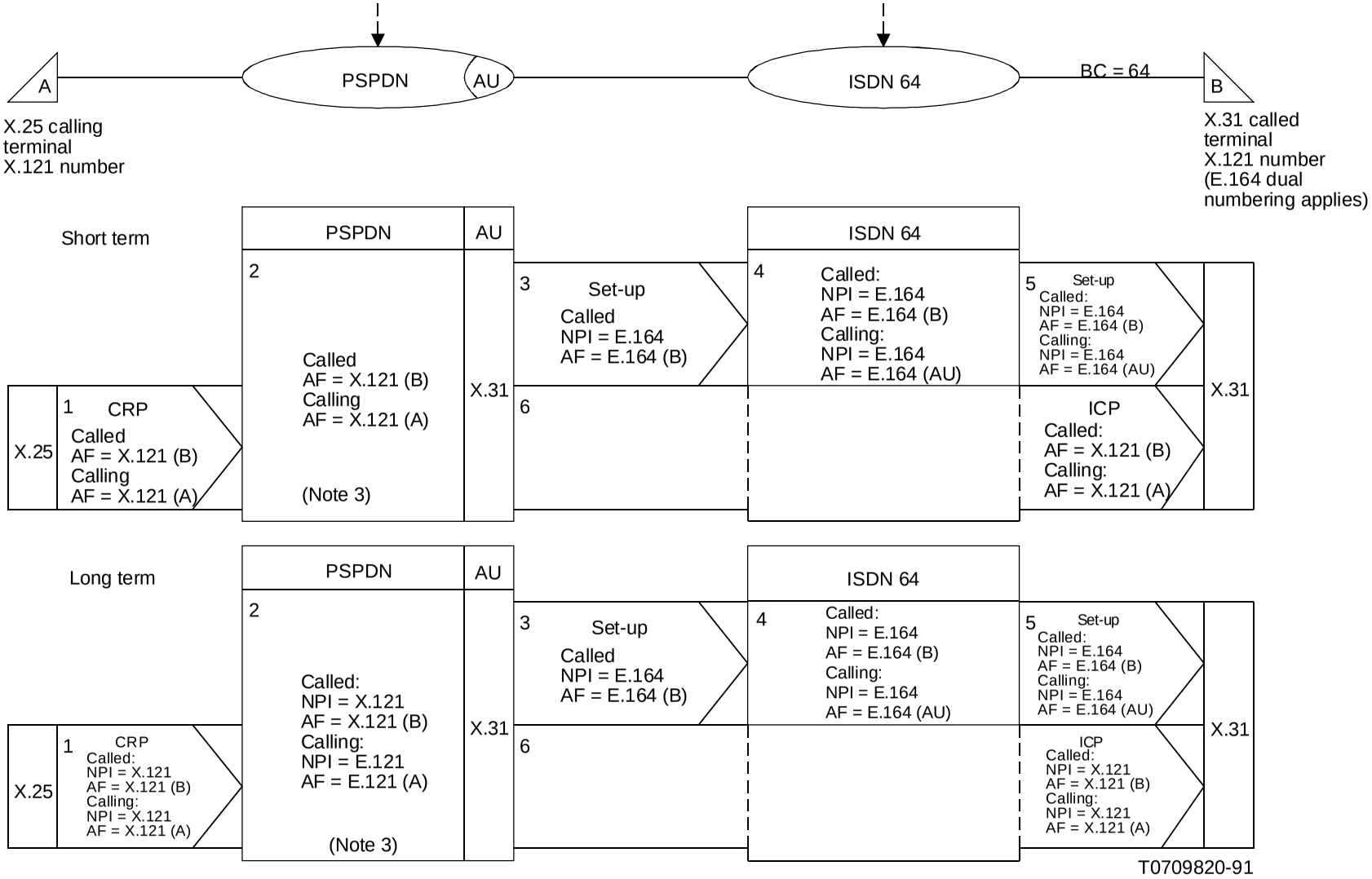

Note 1 – This scenario is single stage dialling.

Note 2 – Steps 3, 4 and 5 are not used when a circuit is already established.

Note 3 – The AU has to achieve translation to obtain E.164(B) from X.121(B).

FIGURE 25

Interworking from a PSPDN to an ISDN using X.31 procedures (BC = 64) (E = 64 and X.121 address)

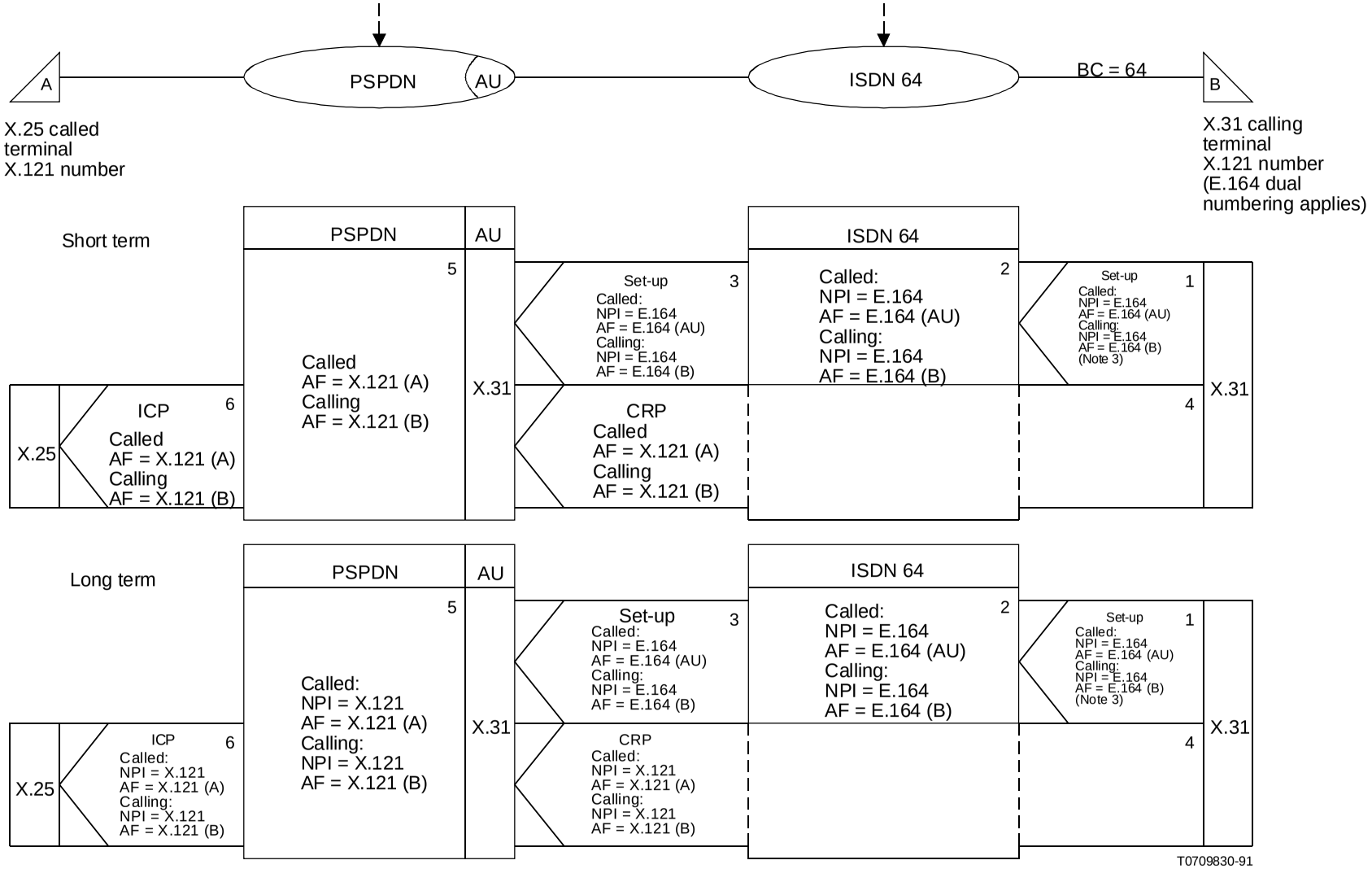

Note 1 – This scenario is double stage dialling.

Note 2 – Steps 3, 4 and 5 are not used when a circuit is already established.

Note 3 – The calling party identity is optional (see Recommendation X.31).

FIGURE 26
Interworking from an ISDN using X.31 procedures (BC = 64) (E.164 and X.121 address) to a PSPDN

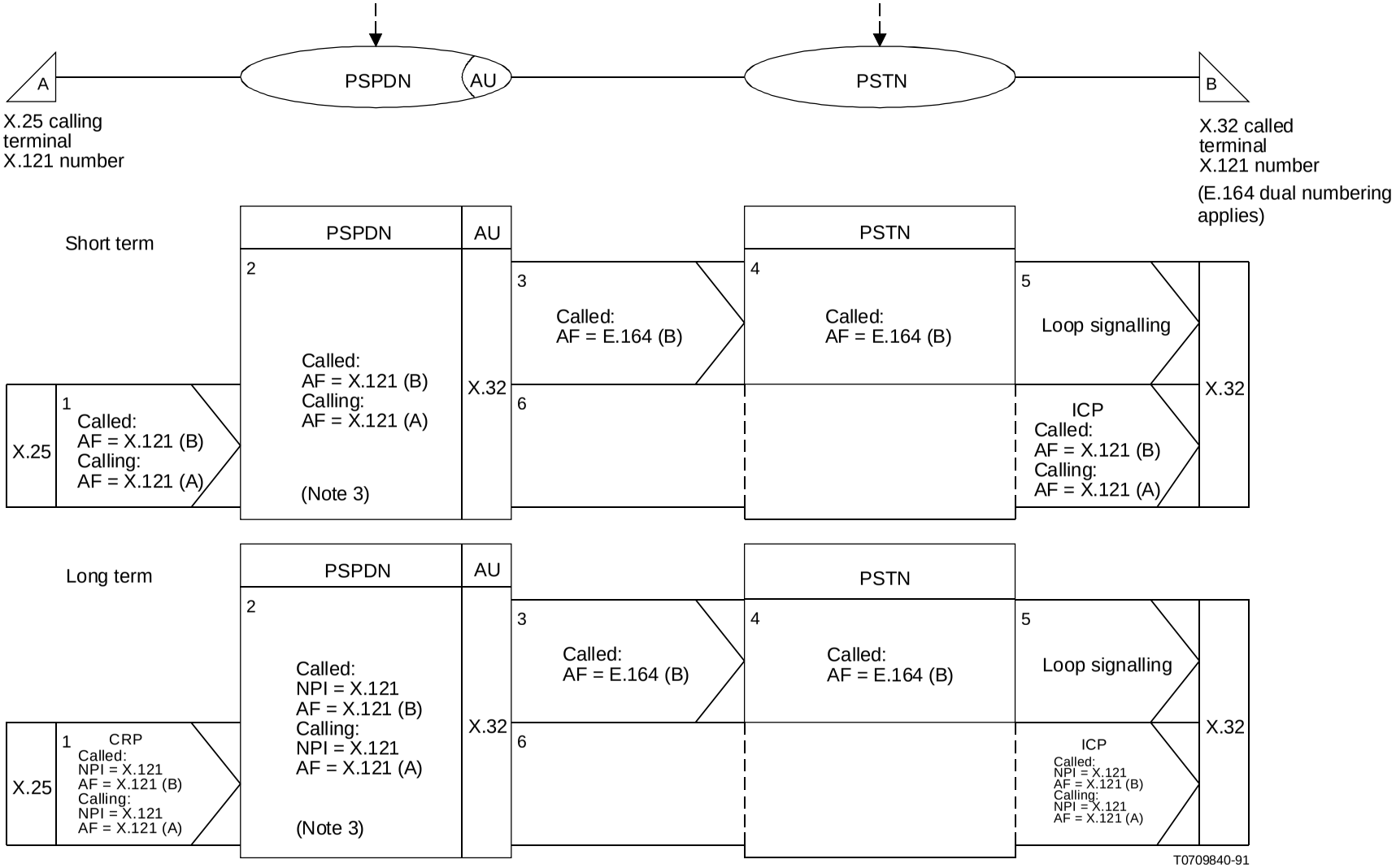

Note 1 – This scenario is single stage dialling.

Note 2 – Steps 3, 4, and 5 are not used when a circuit is already established.

Note 3 – The AU has to achieve transalation to obtain E.164(B) from X.121(B).

FIGURE 27

Interworking from a PSPDN to a PSTN using X.32 procedures (E.164 and X.121 address)

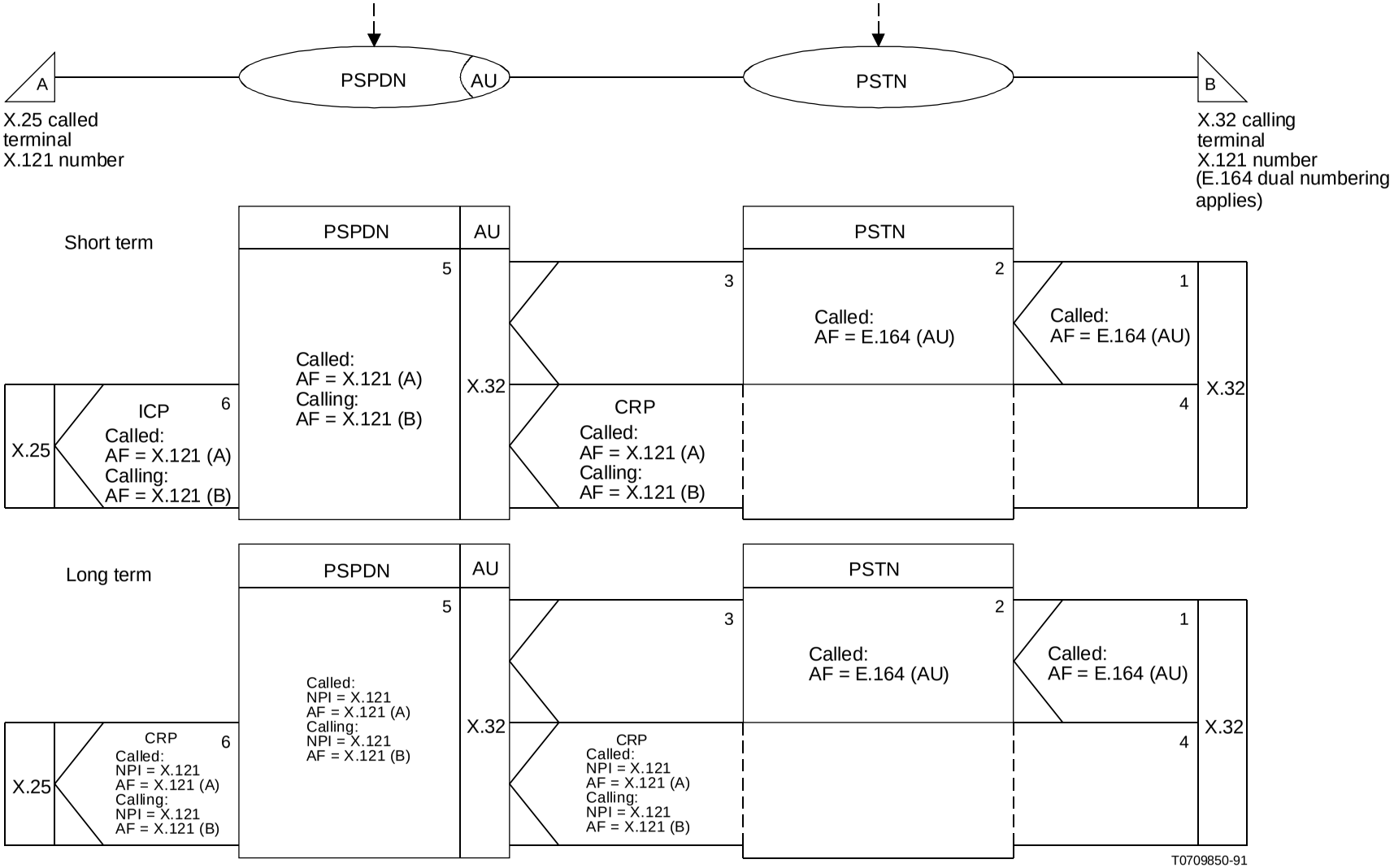

Note 1 – This scenario is double stage dialling.
Note 2 – Steps 1, 2 and 3 are not used when a circuit is already established.

FIGURE 28
Interworking from a PSTN using X.32 procedures (E.164 and X.121 address) to a PSPDN

8 Recommendation history

Recommendation E.166	First issue 1988
Recommendation X.122	First issue 1988
Recommendation I.332	First issue 1987
Recommendation I.332	Second issue 1988
Recommendation E.166/X.122	First issue 1992; combined version replacing Recommendations E.166, X.122 and I.332

Printed in Switzerland

Geneva, 1993