Digital Financial Services Security Clinic

Addressing security risks to digital finance ecosystem

# Mobile Payment Application Security Tests

**Arnold Kibuuka**
Project Officer, TSB, ITU

# Overview

1. USSD & STK App security tests
2. Android App security tests

# USSD and STK App Security Tests

# USSD and STK App Security Tests

a. **SIM Swap** and **SIM cloning**


b. susceptibility to **binary OTA attacks** (SIM jacker, WIB attacks)

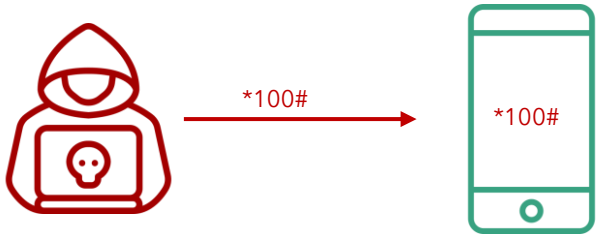


c. **remote USSD** execution attacks

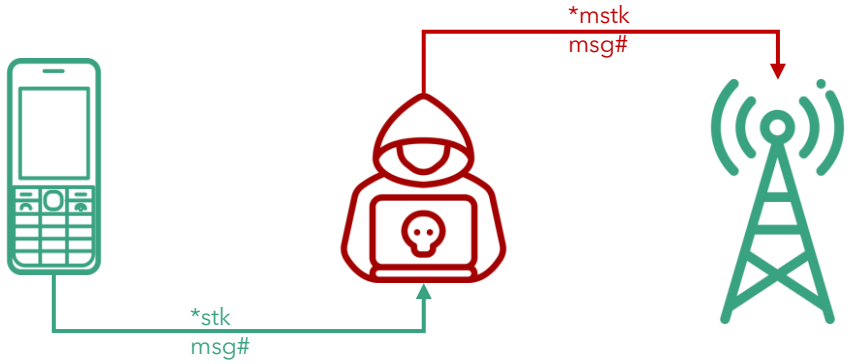


d. **man-in-the-middle attacks** on STK based DFS applications

# Man-in-the-Middle attacks on STK based DFS applications

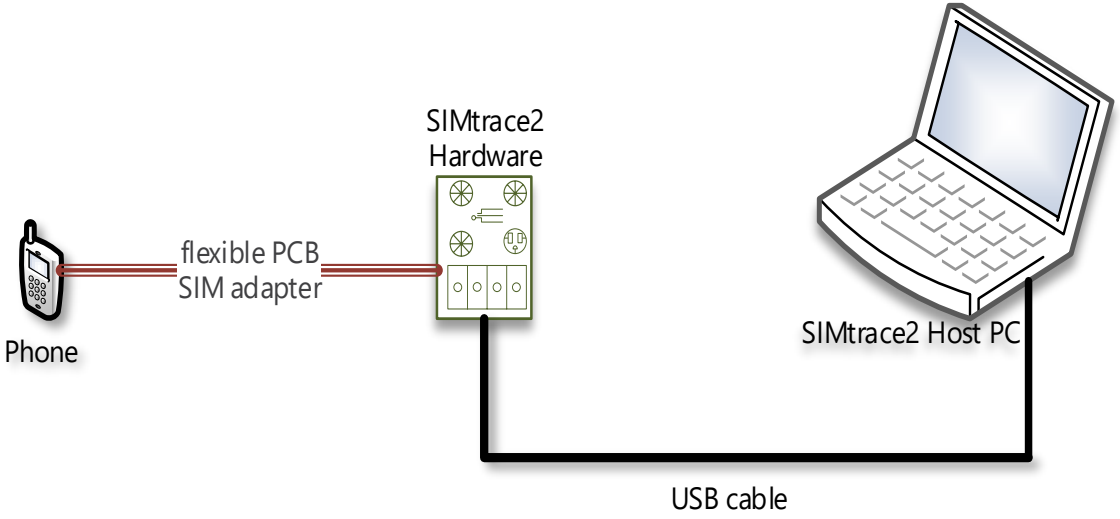


MiTM attack simulation on STK using a SIMtrace

# Man-in-the-Middle attacks on STK based DFS applications

| | | | | | | | | | |
|---|---|---|---|---|---|---|---|---|---|
| 405 | 125.… | lo… | lo… | GSM … | 65 | ETSI TS 102.221 | STATUS : Terminal should repeat command, Lengt… | 38229 | (38229),gsmtap (4729) |
| 54 | 32.8… | lo… | lo… | GSM … | 83 | ETSI TS 102.221 | TERMINAL PROFILE | 38229 | (38229),gsmtap (4729) |
| 349 | 85.5… | lo… | lo… | GSM … | 77 | ETSI TS 102.221 | TERMINAL RESPONSE DISPLAY TEXT | 38229 | (38229),gsmtap (4729) |
| 393 | 105.… | lo… | lo… | GSM … | 77 | ETSI TS 102.221 | TERMINAL RESPONSE DISPLAY TEXT | 38229 | (38229),gsmtap (4729) |
| 407 | 128.… | lo… | lo… | GSM … | 77 | ETSI TS 102.221 | TERMINAL RESPONSE DISPLAY TEXT | 38229 | (38229),gsmtap (4729) |
| 434 | 149.… | lo… | lo… | GSM … | 77 | ETSI TS 102.221 | TERMINAL RESPONSE DISPLAY TEXT | 38229 | (38229),gsmtap (4729) |
| 345 | 80.2… | lo… | lo… | GSM … | 84 | ETSI TS 102.221 | TERMINAL RESPONSE GET INPUT | 38229 | (38229),gsmtap (4729) |
| 403 | 121.… | lo… | lo… | GSM … | 84 | ETSI TS 102.221 | TERMINAL RESPONSE GET INPUT | 38229 | (38229),gsmtap (4729) |
| 157 | 33.4… | lo… | lo… | GSM … | 81 | ETSI TS 102.221 | TERMINAL RESPONSE POLL INTERVAL | 38229 | (38229),gsmtap (4729) |
| 351 | 86.0… | lo… | lo… | GSM … | 87 | ETSI TS 102.221 | TERMINAL RESPONSE PROVIDE LOCAL INFORMATION | 38229 | (38229),gsmtap (4729) |
| 409 | 129.… | lo… | lo… | GSM … | 87 | ETSI TS 102.221 | TERMINAL RESPONSE PROVIDE LOCAL INFORMATION | 38229 | (38229),gsmtap (4729) |
| 332 | 62.8… | lo… | lo… | GSM … | 80 | ETSI TS 102.221 | TERMINAL RESPONSE SELECT ITEM | 38229 | (38229),gsmtap (4729) |
| 336 | 65.0… | lo… | lo… | GSM … | 77 | ETSI TS 102.221 | TERMINAL RESPONSE SELECT ITEM | 38229 | (38229),gsmtap (4729) |
| 338 | 68.3… | lo… | lo… | GSM … | 80 | ETSI TS 102.221 | TERMINAL RESPONSE SELECT ITEM | 38229 | (38229),gsmtap (4729) |
| 340 | 71.5… | lo… | lo… | GSM … | 80 | ETSI TS 102.221 | TERMINAL RESPONSE SELECT ITEM | 38229 | (38229),gsmtap (4729) |
| 396 | 111.… | lo… | lo… | GSM … | 80 | ETSI TS 102.221 | TERMINAL RESPONSE SELECT ITEM | 38229 | (38229),gsmtap (4729) |
| 401 | 116.… | lo… | lo… | GSM … | 80 | ETSI TS 102.221 | TERMINAL RESPONSE SELECT ITEM | 38229 | (38229),gsmtap (4729) |
| 370 | 89.9… | lo… | lo… | GSM … | 77 | ETSI TS 102.221 | TERMINAL RESPONSE SEND SHORT MESSAGE | 38229 | (38229),gsmtap (4729) |
| 428 | 133.… | lo… | lo… | GSM … | 77 | ETSI TS 102.221 | TERMINAL RESPONSE SEND SHORT MESSAGE | 38229 | (38229),gsmtap (4729) |
| 121 | 33.2… | lo… | lo… | GSM … | 77 | ETSI TS 102.221 | TERMINAL RESPONSE SET UP EVENT LIST | 38229 | (38229),gsmtap (4729) |

```
Command details: 012304
    Command Number: 0x01
    Command Type: GET INPUT (0x23)
    Command Qualifier: 0x04
Device identity: 8281
    Source Device ID: Terminal (Card Reader) (0x82)
    Destination Device ID: SIM / USIM / UICC (0x81)
Result: 00
    Result: Command performed successfully (0x00)
Text string: 0435343533
    Text String Encoding: GSM default alphabet, 8 bits (0x04)
    Text String: 5453
Status Word: 911c Normal [illegible] of command with info from proactive SIM
```

DFS PIN from captured data


Thin SIM

Analysis of trace packets from SIMtrace device

# Testing susceptibility to binary OTA attacks (SIMjacker, WIB attacks)

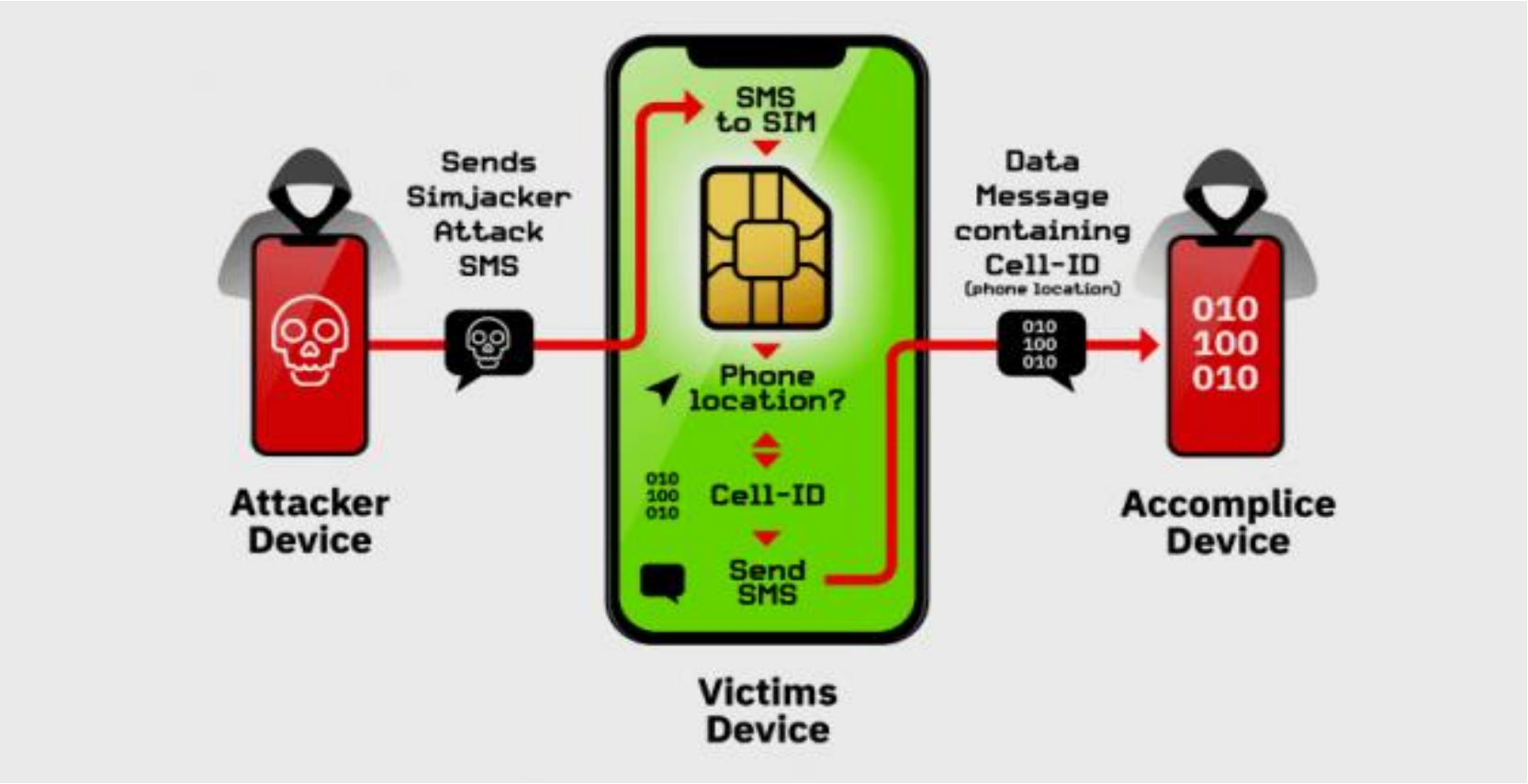


Source: Adaptive Mobile

A binary OTA message can instruct the SIM to:

- initiate SS,
- Send SMS
- Initiate a phone call

on a vulnerable SIM and will affect both USSD and STK apps.

(see CVE-2019-16256)

# Testing remote USSD execution attacks

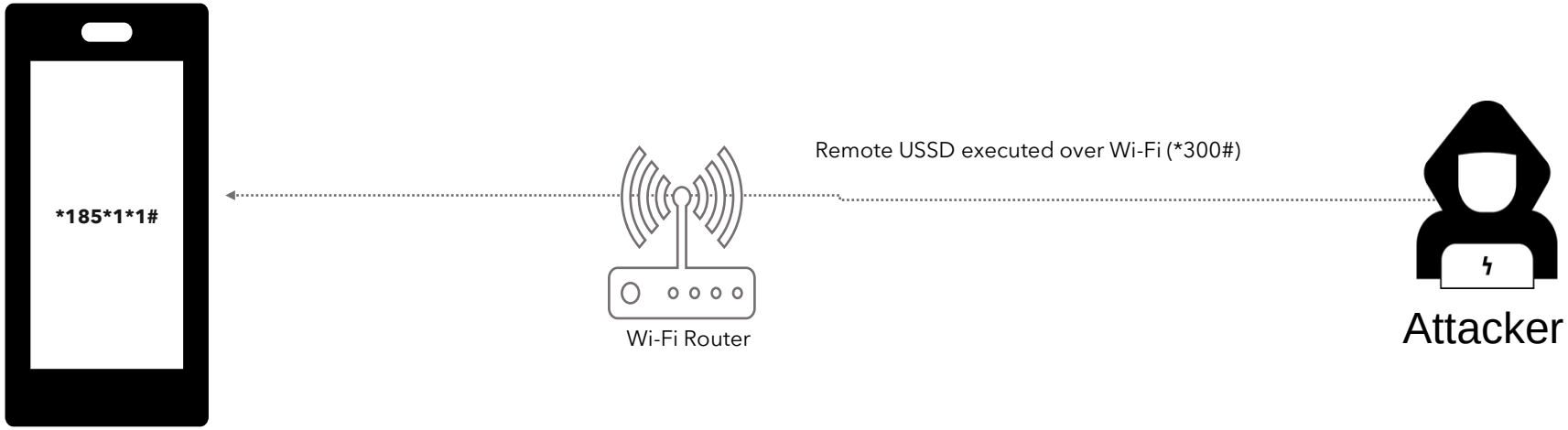


Setup for testing USSD remote attacks through open ADB ports

```
figisit@ubuntu: ~/LAB/platform-tools
figisit@ubuntu:~/LAB/platform-tools$ ./adb shell
HWEVA:/ $ am start -a android.intent.action.CALL -d tel:*185%23
Starting: Intent { act=android.intent.action.CALL dat=tel:xxxxx }
HWEVA:/ $ am start -a android.intent.action.CALL -d tel:*185*1*1%23
Starting: Intent { act=android.intent.action.CALL dat=tel:xxxxxxxxx }
HWEVA:/ $
```

*USSD execution through a terminal for a device connected to Wi-Fi*

# Testing remote USSD execution attacks

Shodan | Developers | Book | View All... | Show API Key | Help Center

SHODAN | android debug bridge product:"Android Debug Bridge | Explore | Downloads | Reports | Developer Pricing | Enterprise Access | Contact Us | My Account

Exploits | Maps | Like 1 | Download Results | Create Report

TOTAL RESULTS

31,471

TOP COUNTRIES

| | |
|---|---|
| Taiwan | 7,611 |
| Korea, Republic of | 7,548 |
| China | 4,961 |
| United States | 2,864 |
| Russian Federation | 1,792 |

TOP ORGANIZATIONS

| | |
|---|---|
| HiNet | 5,568 |
| Korea Telecom | 4,805 |
| SK Broadband | 1,475 |
| China Unicom FuJian | 1,198 |
| China Telecom jiangsu | 300 |

TOP OPERATING SYSTEMS

| | |
|---|---|
| Linux 3.x | 99 |
| Windows XP | 44 |
| FreeBSD 8.x-9.x | 3 |
| Windows 7 or 8 | 1 |

**219.78.245.136**
n219078245136.netvigator.com
Netvigator
Added on 2018-08-25 14:58:24 GMT
Hong Kong, Kowloon
Details
scanner

Android Debug Bridge
Name: mars_a31s
Model: Q-BOX 02
Device: mars-a31s

**211.193.83.5**
Korea Telecom
Added on 2018-08-25 14:57:57 GMT
Korea, Republic of, Changwon
Details

Android Debug Bridge
Name: ghost_retasia
Model: XT1052
Device: ghost

**121.161.37.75**
Korea Telecom
Added on 2018-08-25 14:57:27 GMT
Korea, Republic of, Koyang
Details

Android Debug Bridge
Name: taimen
Model: PIXEL 2 XL
Device: taimen

**62.152.25.229**
cpe-405323.ip.primehome.com
Primetel PLC
Added on 2018-08-25 14:57:23 GMT
Cyprus, Paphos
Details

Android Debug Bridge
Name: p212_8189
Model: p212_8189
Device: p212_8189

*Shodan report: showing services with ADB open connected to the internet*

**118.34.155.116**
Korea Telecom
Added on 2018-08-25 14:57:20 GMT
Korea, Republic of, Seoul
Details

Android Debug Bridge
Name: ghost_retasia
Model: XT1052
Device: ghost

adb can also be used to attack services on IoT devices

# Recommendations

## Remote USSD execution on devices

- Disable ADB
- User education
- Discourage use rooted devices

## SIM exploitation using binary OTA

- Binary OTA SMS filtering & blocking.
- SMS home routing.
- SIM card security

## Man-in-the-Middle attacks

- Use session timeout
- Secure radio channel communication
- SS7 controls and mitigations

## SIM swap and SIM clone attacks

- SIM change detection. (ICCID, IMEI)
- Secure storage of SIM data like IMSI and secret key (KI values)

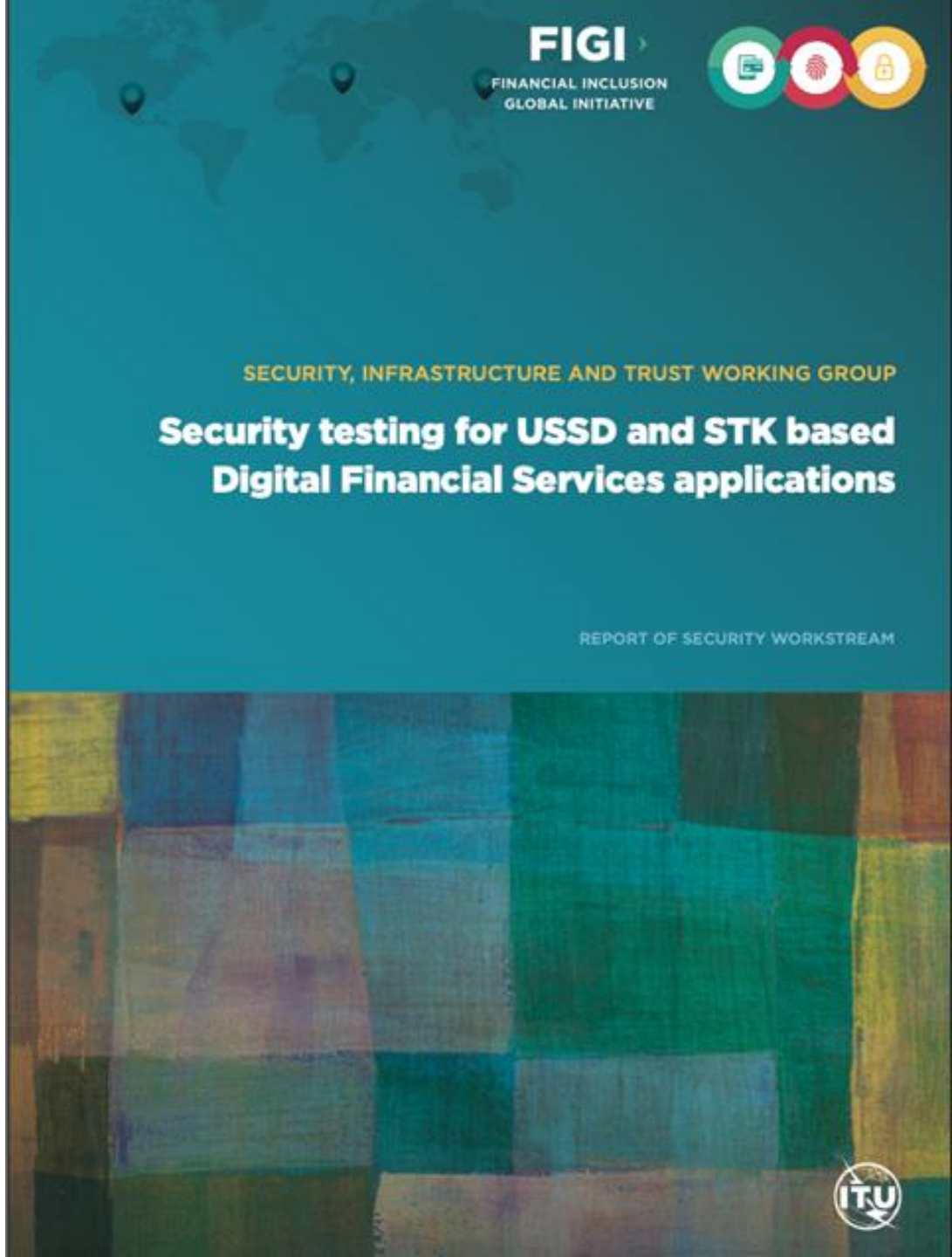

# Hardware for security testing of USSD and STK based DFS

1. Laptop
2. Mobile Android smartphone, Samsung S4
3. Card reader
4. SIM card adapter
5. Mobile featurephone, Samsung 1200
6. Programmable/blank SIMs
7. SIMtrace microSIM & SIM (3FF) FPC Cab
8. SIMtrace2 Hardware Kit
9. Wi-Fi router - Synology RT2600AC





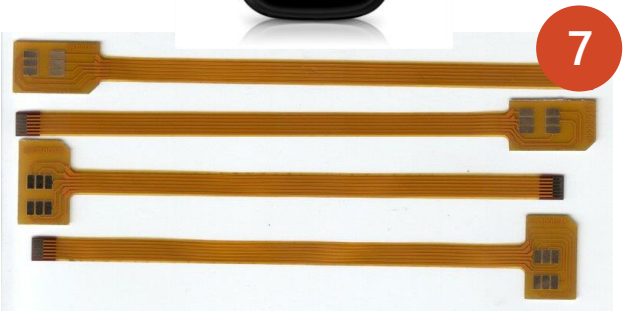


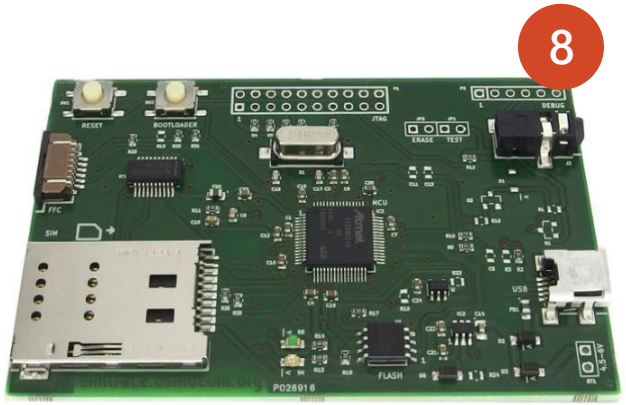



www.figi.itu.int/figi-resources/dfs-security-lab/

# Software for USSD and STK based DFS security testing

i. pySIM: - SIM cloning

ii. SIMtrace: - Man-in-the-middle attacks

iii. SIM tester: - Binary OTA attacks

iv. ADB platform tools: - Remote USSD attack

v. Wireshark: - STK analysis

# Android App Security Tests

# Introduction

### The Open Web Application Security Project

A collaborative, non-for-profit foundation that works to improve the security of web applications

Also works on security of mobile applications.

### OWASP Mobile Top Ten

OWASP project that aims to identify and document the top ten vulnerabilities of mobile applications

### Lab methodology

18 tests organized according to OWASP mobile top ten

# Android tests

- Our tests are organized according to the subjects of the OWASP Mobile Top Ten:
  - M1 Improper Platform Usage
  - M2 Insecure Data Storage
  - M3 Insecure Communication
  - M4 Insecure Authentication
  - M5 Insufficient Cryptography
  - M6 *Insecure Authorization*
  - M7 *Client Code Quality*
  - M8 Code Tampering
  - M9 Reverse Engineering
  - M10 *Extraneous Functionality*
- M6, M7, M10 out of scope because they would need access to the source code or require collaboration with the editor

# M1 Improper Platform Usage

*The application should make correct use of the features of the platform (phone's operating system)*

T1.1 Android:allowBackup

- Backup of the application and its data into the cloud should be disabled

T1.2 Android:debuggable

- Debugging features of the application should be disabled

T1.3 Android:installLocation

- The application should be installed in the internal, more secure, memory

T1.4 Dangerous permissions

- The application should not require dangerous permissions, as defined by Android.

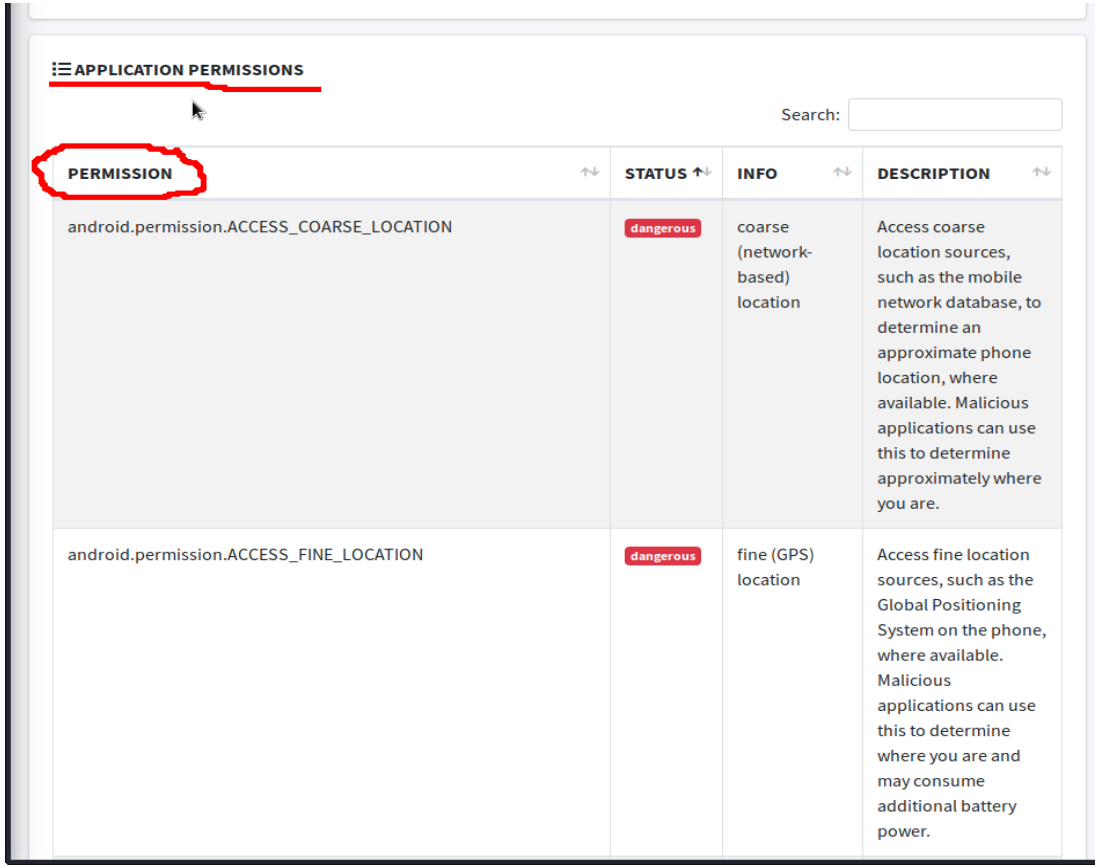

APPLICATION PERMISSIONS

Search:

| PERMISSION | STATUS | INFO | DESCRIPTION |
|---|---|---|---|
| android.permission.ACCESS_COARSE_LOCATION | dangerous | coarse (network-based) location | Access coarse location sources, such as the mobile network database, to determine an approximate phone location, where available. Malicious applications can use this to determine approximately where you are. |
| android.permission.ACCESS_FINE_LOCATION | dangerous | fine (GPS) location | Access fine location sources, such as the Global Positioning System on the phone, where available. Malicious applications can use this to determine where you are and may consume additional battery power. |

# M2 Insecure Data Storage

```
<uses-sdk android:minSdkVersion="16" android:targetSdkVersion="28"/>
<uses-feature android:name="android.hardware.telephony" android:required="false"/>
<uses-feature android:name="android.hardware.telephony.cdma" android:required="false"/>
<uses-feature android:name="android.hardware.telephony.gsm" android:required="false"/>
<uses-feature android:name="android.hardware.camera" android:required="false"/>
<uses-feature android:name="android.hardware.camera.autofocus" android:required="false"/>
<uses-feature android:name="android.hardware.camera.flash" android:required="false"/>
<uses-feature android:name="android.hardware.camera.front" android:required="false"/>
<uses-feature android:name="android.hardware.camera.any" android:required="false"/>
<uses-feature android:name="android.hardware.bluetooth" android:required="false"/>
<uses-feature android:name="android.hardware.location" android:required="false"/>
<uses-feature android:name="android.hardware.location.network" android:required="false"/>
<uses-feature android:name="android.hardware.location.gps" android:required="false"/>
<uses-feature android:name="android.hardware.microphone" android:required="false"/>
<uses-feature android:name="android.hardware.wifi" android:required="false"/>
<uses-feature android:name="android.hardware.wifi.direct" android:required="false"/>
<uses-feature android:name="android.hardware.screen.landscape" android:required="false"/>
<uses-feature android:name="android.hardware.screen.portrait" android:required="false"/>
<uses-feature android:glEsVersion="0x00020000" android:required="true"/>
<uses-permission android:name="android.permission.INTERNET"/>
<uses-permission android:name="android.permission.ACCESS_NETWORK_STATE"/>
<uses-permission android:name="android.permission.ACCESS_WIFI_STATE"/>
<uses-permission android:name="android.permission.VIBRATE"/>
<uses-permission android:name="android.permission.WAKE_LOCK"/>
<uses-permission android:name="android.permission.USE_FINGERPRINT"/>
<uses-permission android:name="android.permission.ACCESS_FINE_LOCATION"/>
<uses-permission android:name="android.permission.READ_PHONE_STATE"/>
<uses-permission android:name="android.permission.READ_CONTACTS"/>
<uses-permission android:name="android.permission.WRITE_CALENDAR"/>
<uses-permission android:name="android.permission.CAMERA"/>
<uses-permission android:name="android.permission.FLASHLIGHT"/>
<uses-permission android:name="android.permission.WRITE_EXTERNAL_STORAGE"/>
<supports-screens android:largeScreens="true" android:xlargeScreens="true"/>
<uses-permission android:name="com.google.android.c2dm.permission.RECEIVE"/>
```

*Data should be stored in a way that limits the risks in case of loss or compromise of the phone*

T2.1 Android.permission.WRITE_EXTERNAL_STORAGE

- No permission to write to a removable memory card

T2.2 Disabling screenshots

- If not disabled, screen shots are done automatically to generate thumbnails for task switching

# M3 Insecure Communication

*Protect against eavesdropping and manipulation of traffic*

T3.1 Application should only use HTTPS connections

- Test by sniffing traffic

T3.2 Application should detect Machine-in-the-Middle attacks with untrusted Certificates

- Would allow anybody to intercept traffic
- Test by intercepting traffic with proxy

T3.3 Application should detect Machine-in-the-Middle attacks with trusted certificate

- Would allow authorities to intercept traffic
- Test by installing root certificate on phone, intercept with proxy

T3.4 App manifest should not allow clear text traffic

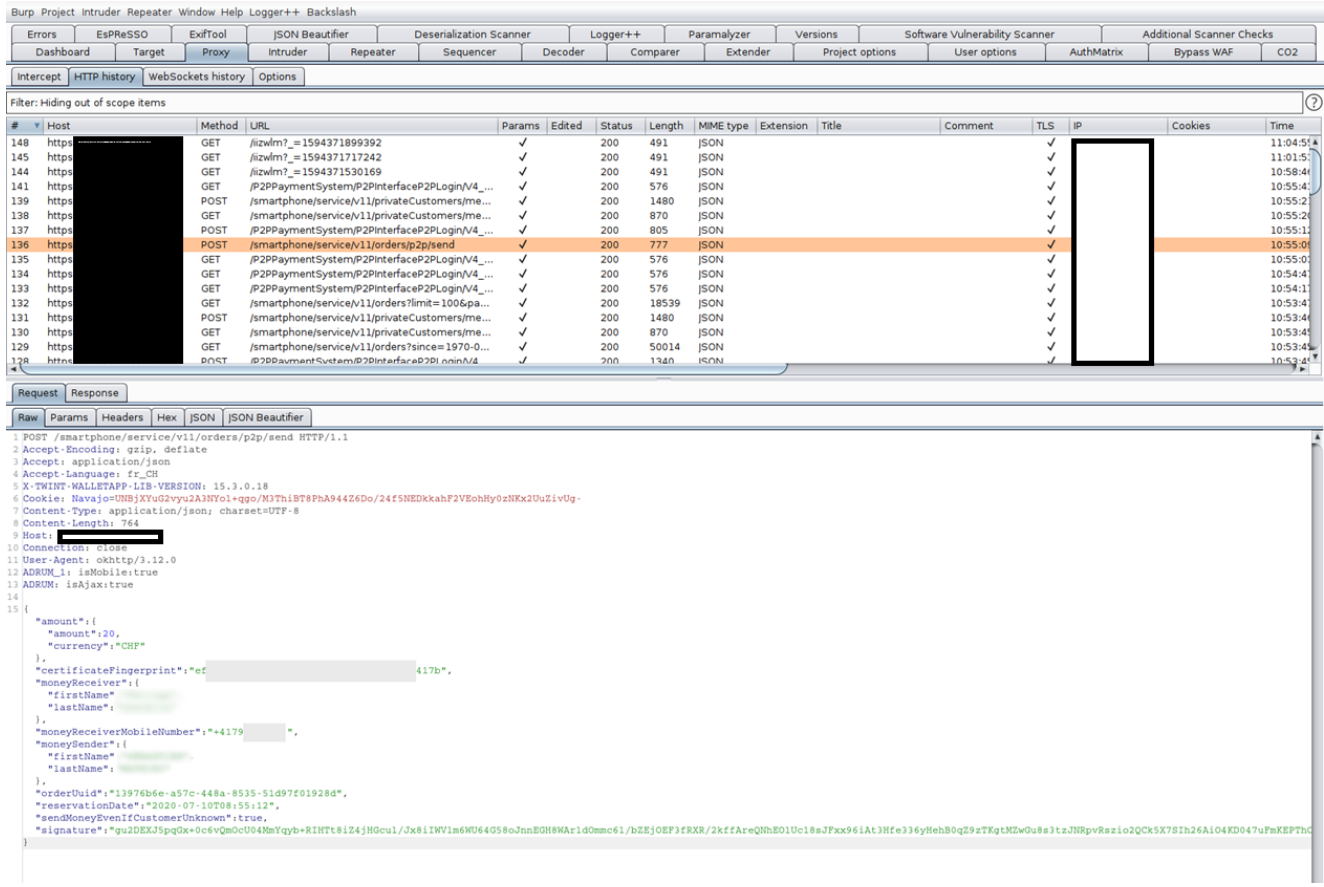

Burp Project Intruder Repeater Window Help Logger++ Backslash

Errors | EsPReSSO | ExifTool | JSON Beautifier | Deserialization Scanner | Logger++ | Paramalyzer | Versions | Software Vulnerability Scanner | Additional Scanner Checks

Dashboard | Target | Proxy | Intruder | Repeater | Sequencer | Decoder | Comparer | Extender | Project options | User options | AuthMatrix | Bypass WAF | CO2

Intercept | HTTP history | WebSockets history | Options

Filter: Hiding out of scope items

| # | Host | Method | URL | Params | Edited | Status | Length | MIME type | Extension | Title | Comment | TLS | IP | Cookies | Time |
|---|---|---|---|---|---|---|---|---|---|---|---|---|---|---|---|
| 148 | https[redacted] | GET | /iizwlm?_=1594371899392 | ✓ | | 200 | 491 | JSON | | | | ✓ | [redacted] | | 11:04:5 |
| 145 | https[redacted] | GET | /iizwlm?_=1594371717242 | ✓ | | 200 | 491 | JSON | | | | ✓ | [redacted] | | 11:01:5 |
| 144 | https[redacted] | GET | /iizwlm?_=1594371530169 | ✓ | | 200 | 491 | JSON | | | | ✓ | [redacted] | | 10:58:4 |
| 141 | https[redacted] | GET | /P2PPaymentSystem/P2PInterfaceP2PLogin/V4_... | ✓ | | 200 | 576 | JSON | | | | ✓ | [redacted] | | 10:55:4 |
| 139 | https[redacted] | POST | /smartphone/service/v11/privateCustomers/me... | ✓ | | 200 | 1480 | JSON | | | | ✓ | [redacted] | | 10:55:2 |
| 138 | https[redacted] | GET | /smartphone/service/v11/privateCustomers/me... | ✓ | | 200 | 870 | JSON | | | | ✓ | [redacted] | | 10:55:2 |
| 137 | https[redacted] | POST | /P2PPaymentSystem/P2PInterfaceP2PLogin/V4_... | ✓ | | 200 | 805 | JSON | | | | ✓ | [redacted] | | 10:55:1 |
| 136 | https[redacted] | POST | /smartphone/service/v11/orders/p2p/send | ✓ | | 200 | 777 | JSON | | | | ✓ | [redacted] | | 10:55:0 |
| 135 | https[redacted] | GET | /P2PPaymentSystem/P2PInterfaceP2PLogin/V4_... | ✓ | | 200 | 576 | JSON | | | | ✓ | [redacted] | | 10:55:0 |
| 134 | https[redacted] | GET | /P2PPaymentSystem/P2PInterfaceP2PLogin/V4_... | ✓ | | 200 | 576 | JSON | | | | ✓ | [redacted] | | 10:54:4 |
| 133 | https[redacted] | GET | /P2PPaymentSystem/P2PInterfaceP2PLogin/V4_... | ✓ | | 200 | 576 | JSON | | | | ✓ | [redacted] | | 10:54:1 |
| 132 | https[redacted] | GET | /smartphone/service/v11/orders?limit=100&pa... | ✓ | | 200 | 18539 | JSON | | | | ✓ | [redacted] | | 10:53:4 |
| 131 | https[redacted] | POST | /smartphone/service/v11/privateCustomers/me... | ✓ | | 200 | 1480 | JSON | | | | ✓ | [redacted] | | 10:53:4 |
| 130 | https[redacted] | GET | /smartphone/service/v11/privateCustomers/me... | ✓ | | 200 | 870 | JSON | | | | ✓ | [redacted] | | 10:53:4 |
| 129 | https[redacted] | GET | /smartphone/service/v11/orders?since=1970-0... | ✓ | | 200 | 50014 | JSON | | | | ✓ | [redacted] | | 10:53:4 |
| 128 | https[redacted] | POST | /P2PPaymentSystem/P2PInterfaceP2PLogin/V4 | ✓ | | 200 | 1340 | JSON | | | | ✓ | [redacted] | | 10:53:4 |

Request | Response

Raw | Params | Headers | Hex | JSON | JSON Beautifier

```
POST /smartphone/service/v11/orders/p2p/send HTTP/1.1
Accept-Encoding: gzip, deflate
Accept: application/json
Accept-Language: fr_CH
X-TWINT-WALLETAPP-LIB-VERSION: 15.3.0.18
Cookie: Navajo=UNBjXYuG2vyu2A3NYol+qgo/M3ThiBT8PhA944Z6Do/24f5NEDkkahF2VEohHy0zNKx2UuZivUg-
Content-Type: application/json; charset=UTF-8
Content-Length: 764
Host: [redacted]
Connection: close
User-Agent: okhttp/3.12.0
ADRUM_1: isMobile:true
ADRUM: isAjax:true

{
  "amount":{
    "amount":20,
    "currency":"CHF"
  },
  "certificateFingerprint":"ef[redacted]417b",
  "moneyReceiver":{
    "firstName"[redacted]
    "lastName":[redacted]
  },
  "moneyReceiverMobileNumber":"+4179[redacted]",
  "moneySender":{
    "firstName"[redacted]
    "lastName":[redacted]
  },
  "orderUuid":"13976b6e-a57c-448a-8535-51d97f01928d",
  "reservationDate":"2020-07-10T08:55:12",
  "sendMoneyEvenIfCustomerUnknown":true,
  "signature":"gu2DEXJ5pqGx+0c6vQmOcU04MmYqyb+RIHTt8iZ4jHGcul/Jx8iIWVlm6WU64G58oJnnEGH8WArldOmmc61/bZEjOEF3fRXR/2kffAreQNhEOlUc18sJFxx96iAt3Hfe336yHehB0qZ9zTKgtMZwGu8s3tzJNRpvRszio2QCk5X7SIh26AiO4KD047uFmKEPThC
}
```

# M4 Insecure Authentication

*Prevent unauthorized access to the application*

T4.1 Authentication required before accessing sensitive information

- Application must require PIN or fingerprint

T4.2 The application should have an inactivity timeout

T4.3 If a new fingerprint is added, authentication with fingerprints should be temporarily disabled

- User should provide PIN to enable fingerprints again
- Prevents attacks where an attacker adds their fingerprint to access the application

T4.4 It should not be possible to replay intercepted requests (e.g. a money transfer)

- An attacker intercepting a request for a money transfer could replay it to steal money from the victim.

# M5: Insufficient Cryptography

```
..
"moneyReceiverMobileNumber":"+4179
"moneySender":{
  "firstName"
  "lastName":
},
```

```
112.     }
113.
114.     @TargetApi(8)
115.     public static File b(Context context) {
116.         if (bl.a()) {
117.             return context.getExternalCacheDir();
118.         }
119.         return new File(Environment.getExternalStorageDirectory().getPath() +
120.     }
121.
122.     public static String b(String str) {
123.         try {
124.             MessageDigest instance = MessageDigest.getInstance("SHA-1");
125.             instance.update(str.getBytes());
126.             return a(instance.digest());
127.         } catch (NoSuchAlgorithmException unused) {
128.             return String.valueOf(str.hashCode());
129.         }
130.     }
131.
132.     @TargetApi(9)
133.     public static boolean b() {
134.         if (bl.b()) {
135.             return Environment.isExternalStorageRemovable();
136.         }
```

*Cryptography can only protect confidentiality and integrity of data if correctly implemented*

T5.1 The app should not use unsafe crypto primitives

- E.g., MD5, SHA-1, RC4, DES, 3DES, Blowfish, ECB
- Search for these in the code
- Detection of these primitives does not imply that they are used for protecting critical information!

T5.2 The HTTPS connections should be configured according to best practices

- Watch where the app connects to, use Qualys SSL labs to evaluate configuration, expect a grade of B or more

# M8: Code Tampering

*Prevent an attacker from tampering the code on the telephone*

T8.1 The application should refuse to run on a rooted device

- On a rooted device, users can manipulate the code of the application

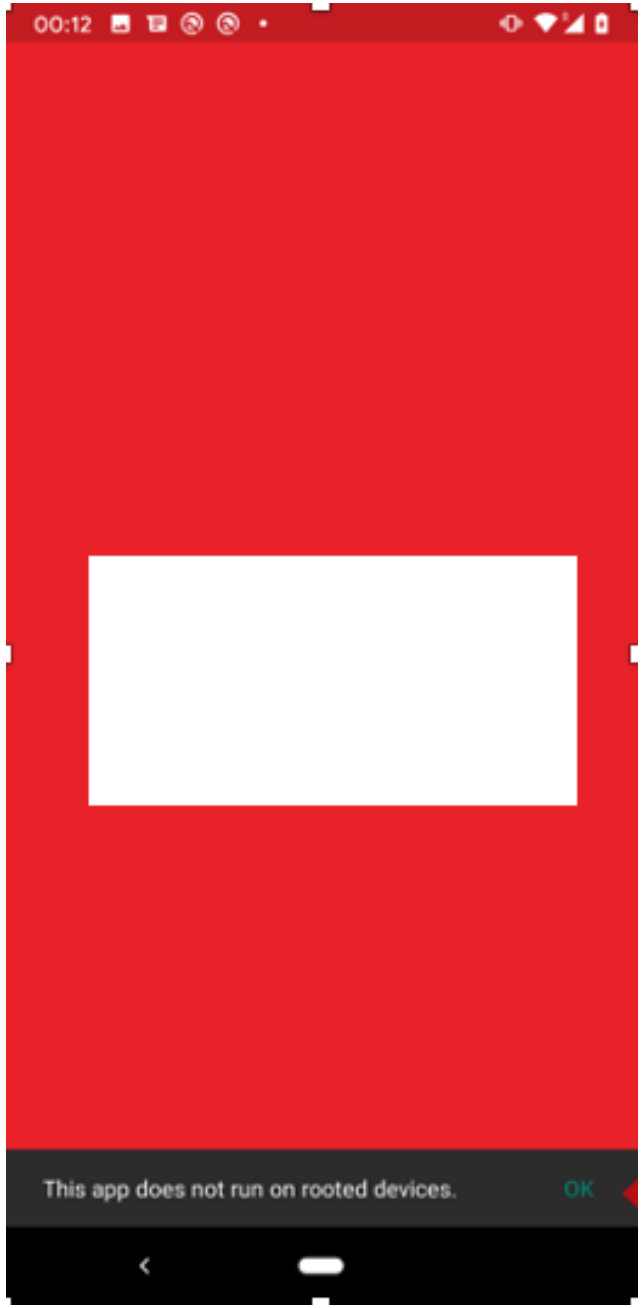


www.figi.itu.int/figi-resources/dfs-security-lab/

# M9 Reverse engineering

```
125.                instance.update(str.getBytes());
126.                return a(instance.digest());
127.            } catch (NoSuchAlgorithmException unused) {
128.                return String.valueOf(str.hashCode());
129.            }
130.        }
131.
132.        @TargetApi(9)
133.        public static boolean b() {
134.            if (bl.b()) {
135.                return Environment.isExternalStorageRemovable();
136.            }
137.            return true;
138.        }
139.
140.        public Bitmap a(String str) {
141.            dt<String, Bitmap> dtVar = this.d;
142.            if (dtVar != null) {
143.                return dtVar.a(str);
144.            }
145.            return null;
146.        }
147.
148.        public void a() {
149.            synchronized (this.g) {
150.                if (this.c == null || this.c.a()) {
151.                    File file = this.f.c;
152.                    if (this.f.g && file != null) {
153.                        if (!file.exists()) {
154.                            file.mkdirs();
155.                        }
```

*Prevent attackers from analyzing the logic of the application*

T9.1 The code should be obfuscated

- When the code is obfuscated, it is much more difficult to understand the logic of the code
- This makes it more difficult to manipulate the code or to find potential vulnerabilities
- Decompile the code and assess its readability

# Android apps tests summary

| Best practices | Corresponding tests |
|---|---|
| **9.1 Device integrity** | T1.2 Android:debuggable<br>T1.4 Dangerous permissions<br>T8.1 The application should refuse to run on a rooted device |
| **9.2 Communication Security and Certificate Handling** | T3.1 Application should only use HTTPS connections<br>T3.2 Application should detect Machine-in-the-Middle attacks with untrusted certificates<br>T3.3 Application should detect Machine-in-the-Middle attacks with trusted certificates<br>T3.4 App manifest should not allow clear text traffic<br>T5.1 The app should not use unsafe crypto primitives<br>T5.2 The HTTPS connections should be configured according to best practices<br>T5.3 The app should encrypt sensitive data that is sent over HTTPS |
| **9.3 User authentication** | T4.1 Authentication required before accessing sensitive information<br>T4.2 The application should have an inactivity timeout<br>T4.3 If a fingerprint is added, authentication with fingerprints should be disabled<br>T4.4 It should not be possible to replay intercepted requests |
| **9.4 Secure Data Handling** | T1.1 Android:allowBackup<br>T1.3 Android:installLocation<br>T2.1 Android.permission.WRITE_EXTERNAL_STORAGE<br>T2.2 Disabling screenshots |
| **9.5 Secure Application Development** | T9.1 The code of the app should be obfuscated |

# What ITU needs to test DFS applications


## USSD and STK Tests

- 2 SIM cards of the networks to be tested.
- Active DFS account on each SIM card.
- DFS Wallet PINs
- Prepaid mobile credit on SIM cards – SIM cards must have mobile roaming enabled for Switzerland
- Include USSD codes for each of the DFS providers.
- DFS Credit on DFS Wallets (approximately $10 to be used for testing)

## Android application tests

in addition to the above requirements, Android apps (apk file) must be shared, or links to download the apps from the Play Store.


# Questions

Contact: dfssecuritylab@itu.int

https://figi.itu.int/figi-resources/dfs-security-lab/

www.itu.int