WIRELESS WONDERS Part 2:

Regulatory aspects of the mobile Internet

MSU Telecom Summer Programme, 16th July 2002

Yoshihisa TAKADA, Project Officer
Strategy and Policy Unit

The views expressed in this presentation are those of the author and do not necessarily reflect the views of ITU and its membership

Outline

- Competition in Mobile Market
- Licensing Policy
  - 3G
- Network Sharing
- Open Mobile Platform
  - Gateways / Portals
  - USIM card
- Consumer Protection
  - Safe Data Transaction / Data Protection
  - Spam
  - Provide Safe Mobility

Competition Status of Telecom Markets

Both Mobile and Internet markets are competitive market

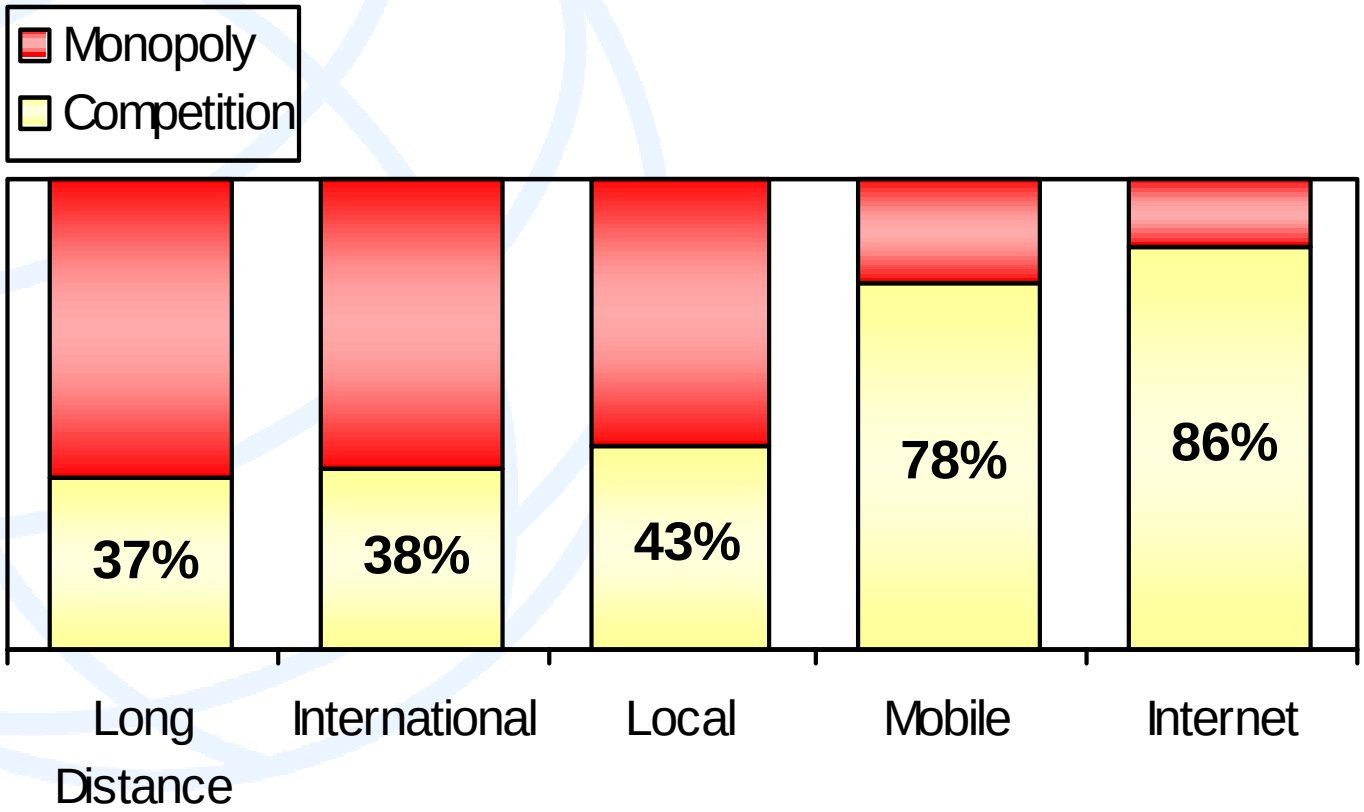

Source: ITU (2001)

Countries with competitive mobile market

- The competition has been progressing

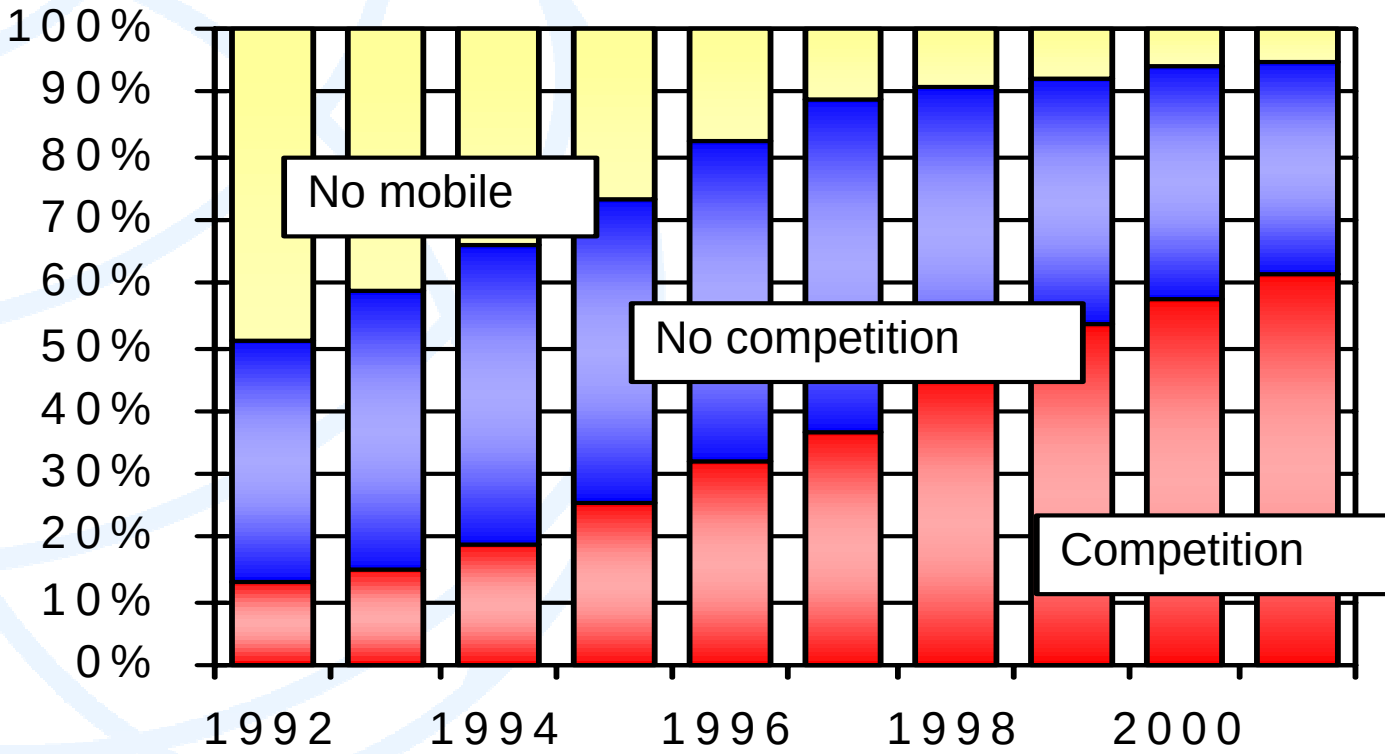

Licensing Policy

- Number of Licenses
  - Many high-incomes countries approach: “n+1”
- Method for License Allocation
  - Auction
    - easy to understand and frees administrators from the pressures of reconciling numerous objectives
  - Beauty contest
    - allocates licenses to operators who best meet stated pre-set criteria
    - puts a much greater burden on policy-makers than an auction
  - Hybrid
- Financial Conditions
  - Fixed or user proportional license fee?

Network Sharing

Mobile Virtual Network Operator (MVNO)

- Two regulatory approaches
  - Support MVNO: MVNO widen users' choice
  - 'Wait and See'

Infrastructure Sharing

- Various models of sharing exist
- EU encourages infrastructure sharing for cost efficiency

Open Mobile Platform

- Gateway

  Japanese mobile operators' plan toward open gateway

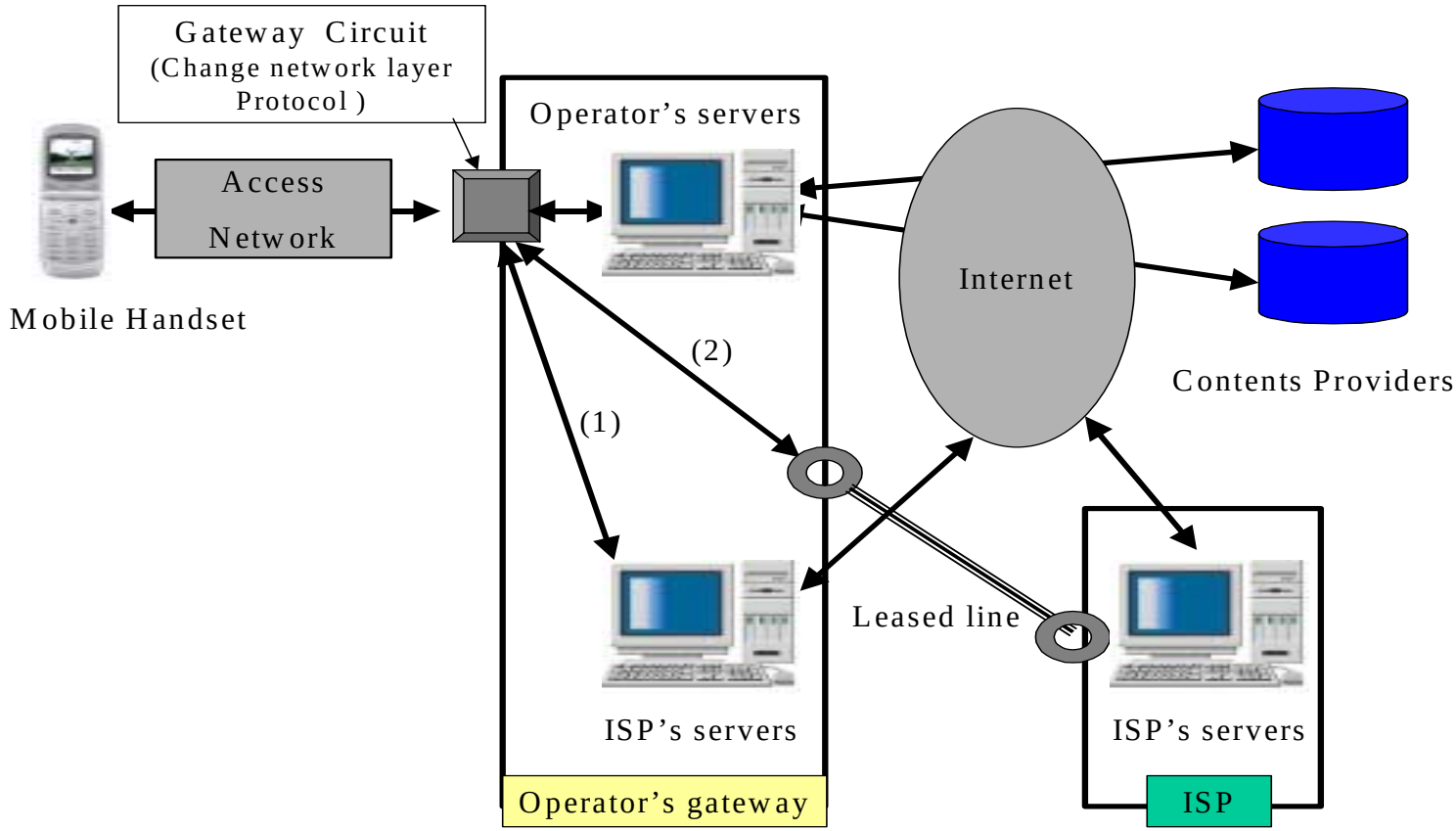

Source: MPHPT, Japan, business models for next generation mobile phones Report

Open Mobile Platform

- Portals

Two aspects requested for open platform

– Transparency in portal contents selection

Japan's regulatory challenge

– Equal portal selection

Regulation toward 'wall garden'

USIM card (Enhanced SIM card)

- USIM card lock
  - Operators prohibit to change user information in SIM card to prevent users' changing operator
  - OFTEL,(UK) limit SIM lock within 12 months
- Number Portability
  - Necessary for users convenience
  - Some European countries introduce number portability to mobile market

Consumer Protection

- Most of consumers are not good at mobile technology and ‘enhanced use’ of handsets
- Safe Data Transaction
  - Unwilling transaction caused by miss-manipulation
- Data Protection
  - Stealing personal data
  - Copying and changing data

Mobile Spam

•Damage by SPAM mail to PCs and mobile Phones

	PC	Mobile handset
Billing	Many broadband service providers offer flat rate service	Billing in proportion to the number of mails
Capacity of mail box	Big (hard disc or other storing devices)	Small, spam mails occupy many mail box capacity.
Header information	Users can read header information that show route from mail senders	Users can read only sending and received mail addresses
Filtering function in terminals	Various systems are provide	Handset capacity is limited.

Source: MPHPT, Japan, Report on the safety of 3G mobile phone

•mobile phones are more vulnerable and users get more financial damages than PCs

•‘opt-in’ and ‘opt-out’ regulations

Providing Safety Mobility

- Major economies have regulation to SAR
  - SAR (Specific Absorption Rate): the widely accepted measurement of radiofrequency energy absorbed into the body in watts per kilogram (W/kg) averaged over some amount of tissue ranging from the entire body to 1 gram
- Radio frequency energy from 3G (W-CDMA and CDMA2000) handsets are lower than 2G

(Source: a research by MPHPT, Japan)

End of Part II:
The Regulatory Aspects

Thank You