Presentation to ETSI

CALM

Continuous communications with vehicles

Bob Williams

Group Senior Consultant

CSI Ltd

Chair : ERM-TG37

Convenor: ISO TC204 WG16.1 : CALM Interfaces

© Consultancy Services International Ltd.

ETSI-ERM TG37 –
ISO TC204 WG16 SG1 CALM

Once upon a time……..

Roadside-vehicle communications comprised.....

© Consultancy Services International Ltd.

ETSI-ERM TG37 –
ISO TC204 WG16 SG1 CALM

Once upon a time……..

Roadside-vehicle communications comprised……..

© Consultancy Services International Ltd.

ETSI-ERM TG37 –
ISO TC204 WG16 SG1 CALM

Once upon a time……..

Roadside-vehicle communications comprised.....

© Consultancy Services International Ltd.

ETSI-ERM TG37 – ISO TC204 WG16 SG1 CALM

- Vehicle to roadside communications comprised.....

© Consultancy Services International Ltd.

ETSI-ERM TG37 – ISO TC204 WG16 SG1 CALM

- Vehicle to vehicle communications were something like.....

© Consultancy Services International Ltd.

ETSI-ERM TG37 – ISO TC204 WG16 SG1 CALM

- Then in the 1980's, it became possible to provide access/take tolls from slow moving or stationary vehicles

© Consultancy Services International Ltd.

ETSI-ERM TG37 – ISO TC204 WG16 SG1 CALM

- In the 1990's the so called "DSRC"... a means of effecting transaction at a single short range point, but without slowing down or controlling the vehicle position on the road became possible.....

© Consultancy Services International Ltd.

ETSI-ERM TG37 – ISO TC204 WG16 SG1 CALM

- During the past decade, our expectations regarding communications has undergone a revolution- the mobile phone, the internet, PC's etc.....

© Consultancy Services International Ltd.

ETSI-ERM TG37 – ISO TC204 WG16 SG1 CALM

- So now, our expectations when on the move and in vehicles lead us to demand

"Continuous communications"

What sort of things might we want this for ?..

© Consultancy Services International Ltd.

ETSI-ERM TG37 –
ISO TC204 WG16 SG1 CALM

THE DRIVER

Well, already in use is route guidance, and some limited forms of Traveller Information- the capabilities of these systems will increase.

© Consultancy Services International Ltd.

ETSI-ERM TG37 –
ISO TC204 WG16 SG1 CALM

THE DRIVER

Well, already in use is route guidance, and some limited forms of Traveller Information- the capabilities of these systems will increase.

The driver may also use his in car unit for value added services (such as fuel purchase, etc)

© Consultancy Services International Ltd.

ETSI-ERM TG37 –
ISO TC204 WG16 SG1 CALM

THE CAR

- **The management unit of the car may be in contact with its maintenance manager- minor programmable problems can be fixed on line**

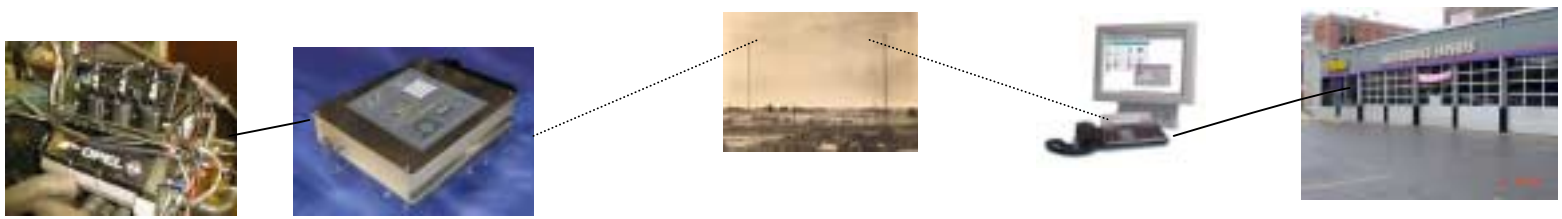

© Consultancy Services International Ltd.

ETSI-ERM TG37 –
ISO TC204 WG16 SG1 CALM

THE CAR

- The management unit of the car may be in contact with its maintenance manager- minor programmable problems can be fixed on line
- More major ones fixed when the car is next idle- or the driver can be advised if a service visit is required.

© Consultancy Services International Ltd.

ETSI-ERM TG37 – ISO TC204 WG16 SG1 CALM

THE CAR

- **Some ‘prophets’ envisage that certain vehicle control features may be imposed (e.g. adherence to speed limits), or data collected from the vehicle for enforcement. (the so called “policeman in the car”)**

© Consultancy Services International Ltd.

ETSI-ERM TG37 –
ISO TC204 WG16 SG1 CALM

Passenger 1

May be, for example, using “yellow page” services to book a hotel, restaurant, entertainment etc.

© Consultancy Services International Ltd.

ETSI-ERM TG37 –
ISO TC204 WG16 SG1 CALM

PASSENGER 2

Is surfing the web in the rear seat……

.

© Consultancy Services International Ltd.

ETSI-ERM TG37 –
ISO TC204 WG16 SG1 CALM

PASSENGER 3

Is downstreaming a video in the other rear seat……

Etc.

© Consultancy Services International Ltd.

ETSI-ERM TG37 – ISO TC204 WG16 SG1 CALM

This provides a major new opportunity to expand the GSM/GPRS market

BUT

We cannot expect harmonisation by road authorities and service providers

Different solutions will be required in different parts of the world

Different services may require different solutions

© Consultancy Services International Ltd.

ETSI-ERM TG37 –
ISO TC204 WG16 SG1 CALM

Vehicle manufacturers have “World Car” business models.

Cars travel from one location to another

A one box solution that will handle different media with handover protocols to maintain service, is required

CALM

GSM/GPRS 3G Microwave 5 GHz, 60 GHz, Infra Red

© Consultancy Services International Ltd.

ETSI-ERM TG37 – ISO TC204 WG16 SG1 CALM

The opportunity is large to expand the GSM/GPRS market as the infrastructure is already in place in most parts of the world.

First generation CALM devices will use GSM/GPRS, and GSM/GPRS will have a lion share of the market for as long as the technology survives

However, some countries are installing 5 GHz infrastructures

Some countries are installing infra red infrastructures

Vehicles will most likely use 60 GHz to communicate between each other

To be acceptable to vehicle manufacturers, CALM must work with all available ITS media

© Consultancy Services International Ltd.

CALM

- In the Autumn of 2000 ISO TC204 recognised that there was now expressed a desire to develop wireless interface Standards and approved an investigation under the lead of Project SET to see if there was a case for, and interest in, this new work
- In Spring 2001 ISO TC204 approved the work items for the CALM Standards
- In Spring 2002 ITU RAST recognised the need for CALM
- In Spring 2003 ETSI have established ERM TG37 to facilitate CALM

© Consultancy Services International Ltd.

CALM

representing :

Continuous

Air-interface

Long and

Medium range.

© Consultancy Services International Ltd.

CALM - SCOPE

ITS requirements for (quasi)continuous communications:

- between fixed and mobile wayside points and vehicle
- between vehicles
- between fixed and mobile (ITS) points other fixed and mobile points

© Consultancy Services International Ltd.

GOING WIRELESS

By definition, communications between roadside and vehicle have to be wireless !!

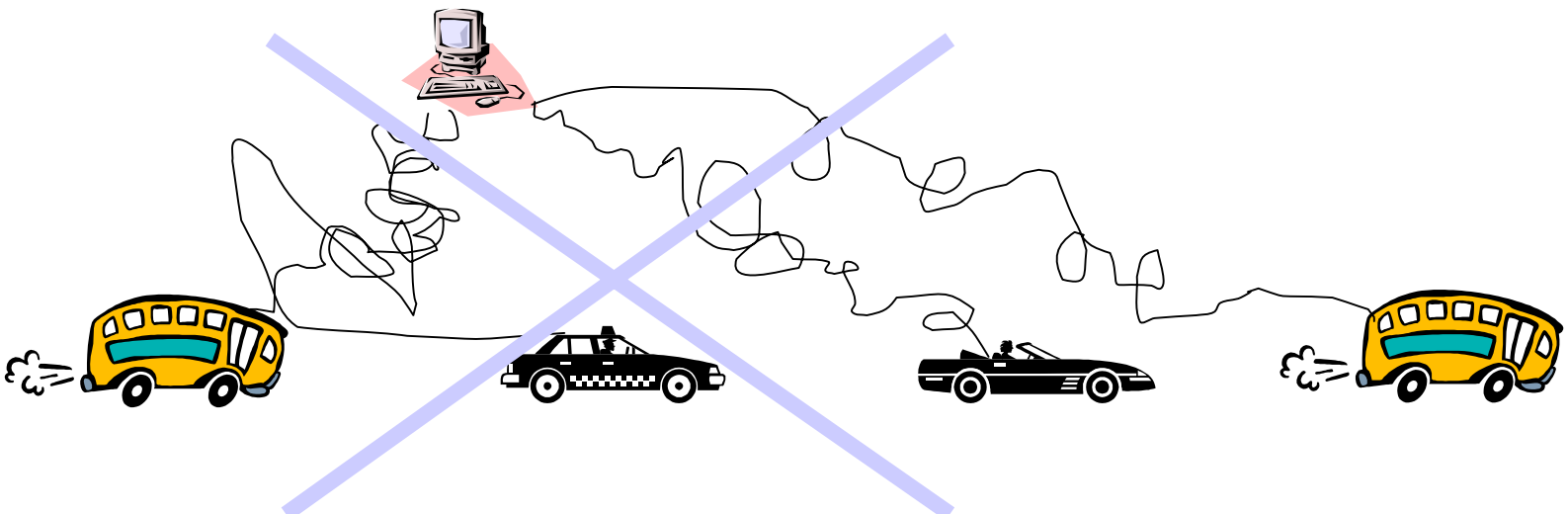

© Consultancy Services International Ltd.

GOING WIRELESS

Communications between roadside and vehicle have to be wireless !!

- **Also data between vehicles.(Intelligent Adaptive cruise control, collision avoidance warnings, etc.)**

© Consultancy Services International Ltd.

GOING WIRELESS

Communications between roadside and vehicle have to be wireless !!

- **Also data between vehicles.(Intelligent Adaptive cruise control, collision avoidance warnings, etc.)**
- **Also trend to the use of wireless communications between ITS equipment on the road side.**

  (eg meteorological and environmental information collection, updating of dynamic road signs)

© Consultancy Services International Ltd.

CALM FUNCTIONALITY

- Multipoint functionality

- handover mechanisms

- Medium – long range

-enables large data exchanges

- Long range

-enables long transaction time

- Supports different functionality than old DSRC

© Consultancy Services International Ltd.

CALM APPLICATIONS
PUBLIC / SAFETY and PRIVATE

PUBLIC / SAFETY

- APPROACHING EMERGENCY VEHICLE ASSISTANT
- EMERGENCY VEHICLE SIGNAL PREEMPTION
- VEHICLE BASED PROBE DATA COLLECTION
- TRAFFIC INFORMATION
- CURVE SPEED ASSISTANCE
- STOP LIGHT ASSISTANT – INFRASTRUCTURE
- INTERSECTION COLLISION WARNING/AVOIDANCE
- COOPERATIVE COLLISION WARNING [V-V]
- OPTIMAL SPEED ADVISORY
- COOPERATIVE VEHICLE SYSTEM – PLATOON
- RAILROAD COLLISION AVOIDANCE
- INFRASTRUCTURE BASED TRAFFIC MANAGEMENT – VEHICLES AS PROBES
- WORK ZONE WARNING
- ROAD CONDITION WARNING
- ROLLOVER WARNING
- LOW BRIDGE WARNING
- LOCATION BASED PROBE DATA COLLECTION
- TRANSIT VEHICLE DATA TRANSFER (gate)
- TRANSIT VEHICLE SIGNAL PRIORITY
- EMERGENCY VEHICLE VIDEO RELAY
- MAINLINE SCREENING
- BORDER CLEARANCE
- ON-BOARD SAFETY DATA TRANSFER
- VEHICLE SAFETY INSPECTION
- DRIVER'S DAILY LOG

PRIVATE

- **ACCESS CONTROL**
- **DRIVE-THRU PAYMENT**
- **PARKING LOT PAYMENT**
- **DATA TRANSFER / INFOFUELING**
  - **ATIS DATA**
  - **DIAGNOSTIC DATA**
  - **REPAIR-SERVICE RECORD**
  - **VEHICLE COMPUTER PROGRAM UPDATES**
  - **MAP and MUSIC DATA UPDATES**
  - **VIDEO UPLOADS**
- **DATA TRANSFER / CVO / TRUCK STOP**
- **ENHANCED ROUTE PLANNING and GUIDANCE**
- **RENTAL CAR PROCESSING**
- **UNIQUE CVO FLEET MANAGEMENT**
- **DATA TRANSFER / TRANSIT VEHICLE (yard)**
- **TRANSIT VEHICLE REFUELING MANAGEMENT**
- **LOCOMOTIVE FUEL MONITORING**
- **DATA TRANSFER / LOCOMOTIVE**

Internet Applications!

ATIS - Advanced Traveler Information Systems
CVO - Commercial Vehicle Operations

RED – Long Range Applications (up to 1000 meters)
BLUE – Medium/Long Range Applications (90-300 m)
BLACK – Medium Range Application (Up to 90 meters)

© Consultancy Services International Ltd.

CALM- Why more than one CALM ?

- **T**he market preferences are not as yet determined.
- Regulations differ around the world
- Getting a single solution preferred by operators around the world seems unlikely
- if we leave the development of Standards until one or more become dominant, it will be too late to achieve interoperability.
- Furthermore, it is probable that more than one of the technologies will be used for different services (for example cellular telephone may be used for in car internet, infra red for in car video).
- Therefore, it is necessary to provide enabling standards to ensure interoperability of such systems that do become dominant.

© Consultancy Services International Ltd.

CALM – What form will this take in the vehicle ?

- Imagine the in vehicle operation a little like you would expect from your car hi-fi.
- Firstly, the device that you have in the vehicle may be supplied by the manufacturer, or you may replace what the manufacturer supplies with a system of higher specification.
- Initially (much as with radios in the 1930-1950's) this will be an after market.
- Increasingly it will be manufacturer standard equipment. But expect that you will get a more capable model in a BMW 7 series than in a Hyundai Excel.

© Consultancy Services International Ltd.

CALM – in the vehicle

- This means that, just as some radios support only FM, others also support AM and LW, some CALM in vehicle units will support one, others several, technologies

© Consultancy Services International Ltd.

CALM – in the vehicle

- Much as you have to programme the stations in a radio, or sequence for a CD, and adjust the stereo settings, there will be a “service table” in the in vehicle unit.
- Some of these choices will be factory or supplier preset, others (i.e. authorisation and financial choices, selection preferences) will be user presets.
- Some choices may need to be made on-trip (although preferably by non drivers).Such choices may, for example, select a choice of offered videos, ask if a fee can be paid for a received service etc.)

© Consultancy Services International Ltd.

SWG 16.0 – Architecture

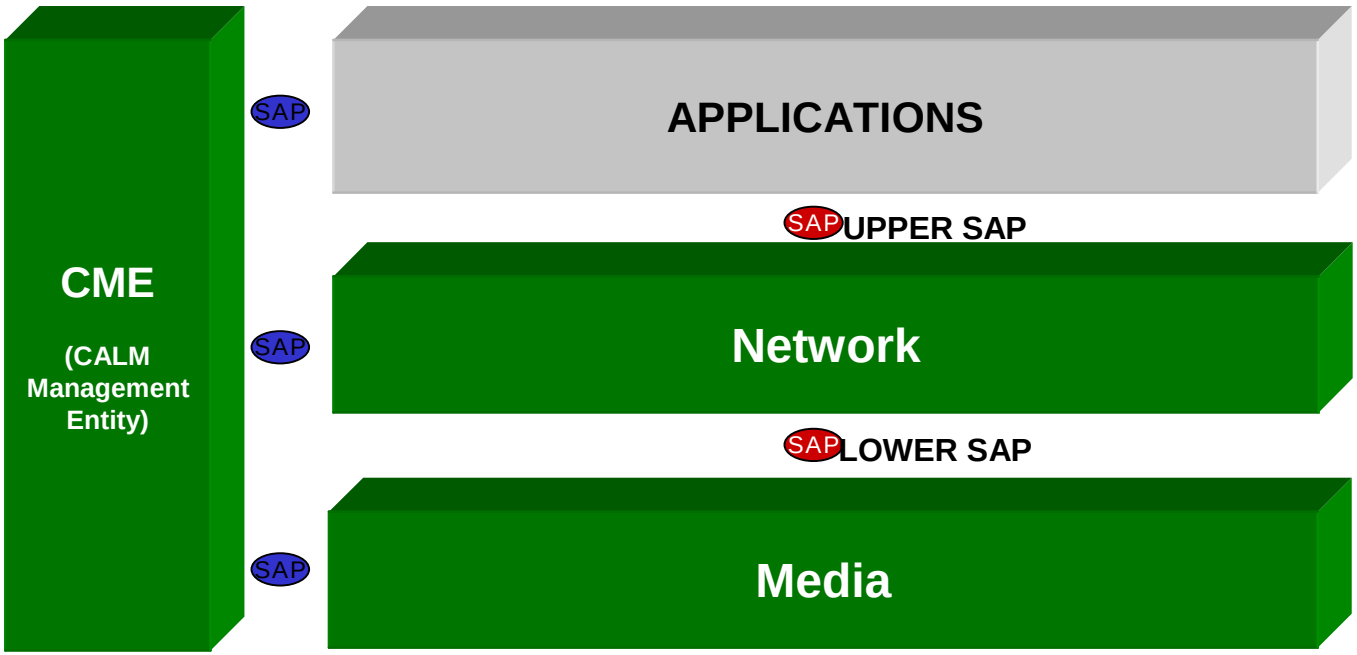

SAP - Service Access Point – Management

SAP - Service Access Point – Data Transfer

© Consultancy Services International Ltd.

Our Scope

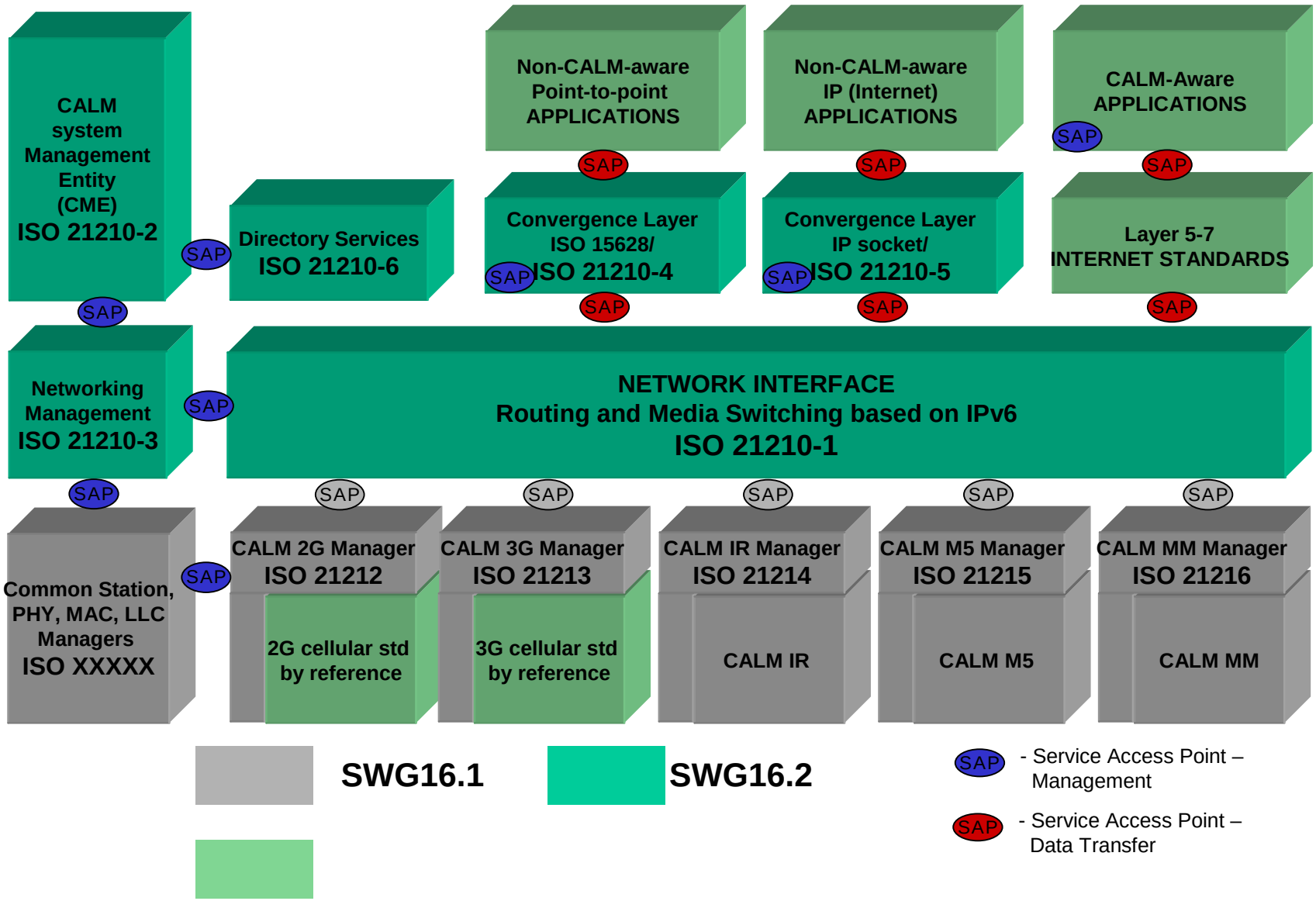

© Consultancy Services International Ltd.

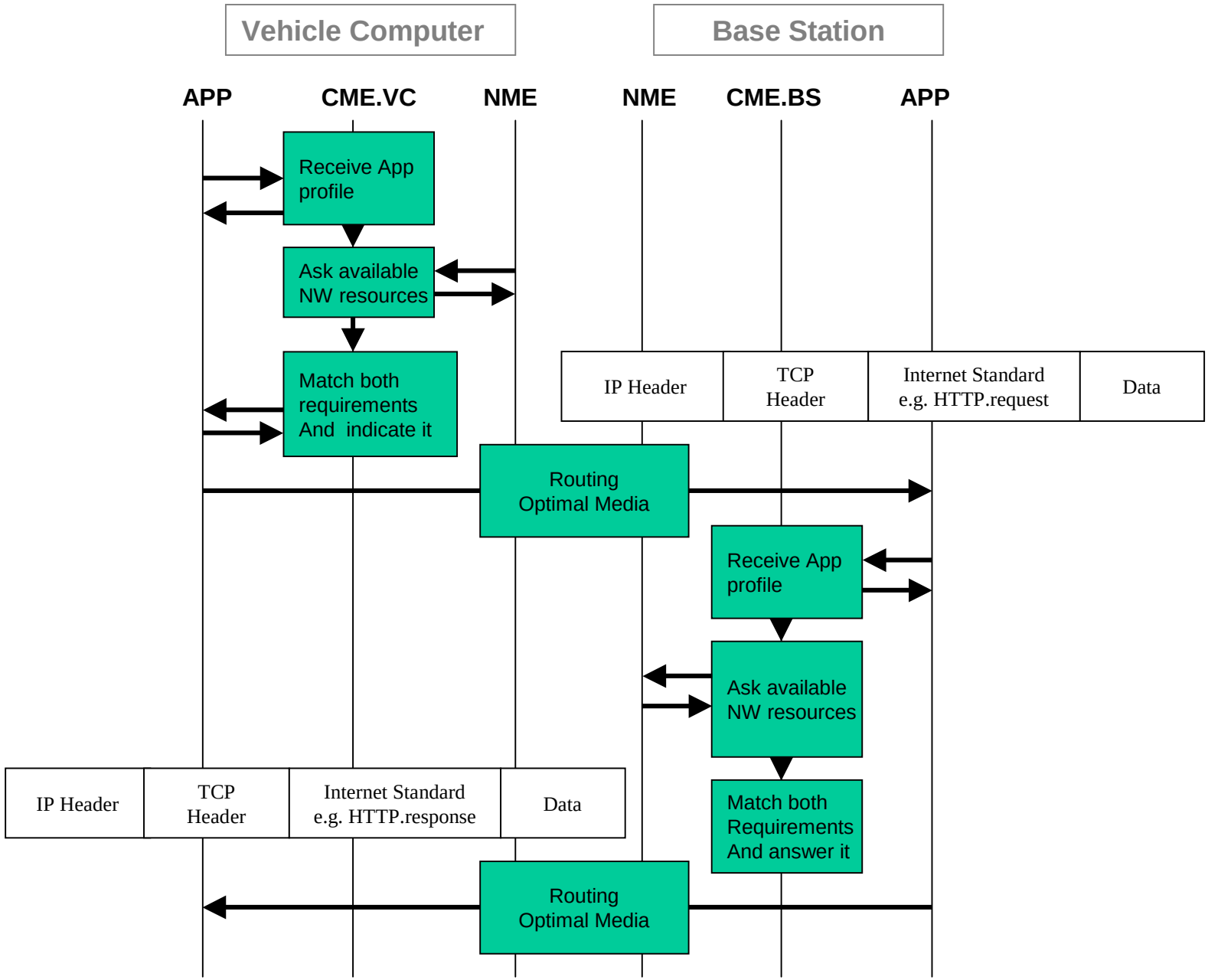

© Consultancy Services International Ltd.

Vehicle Architecture 1

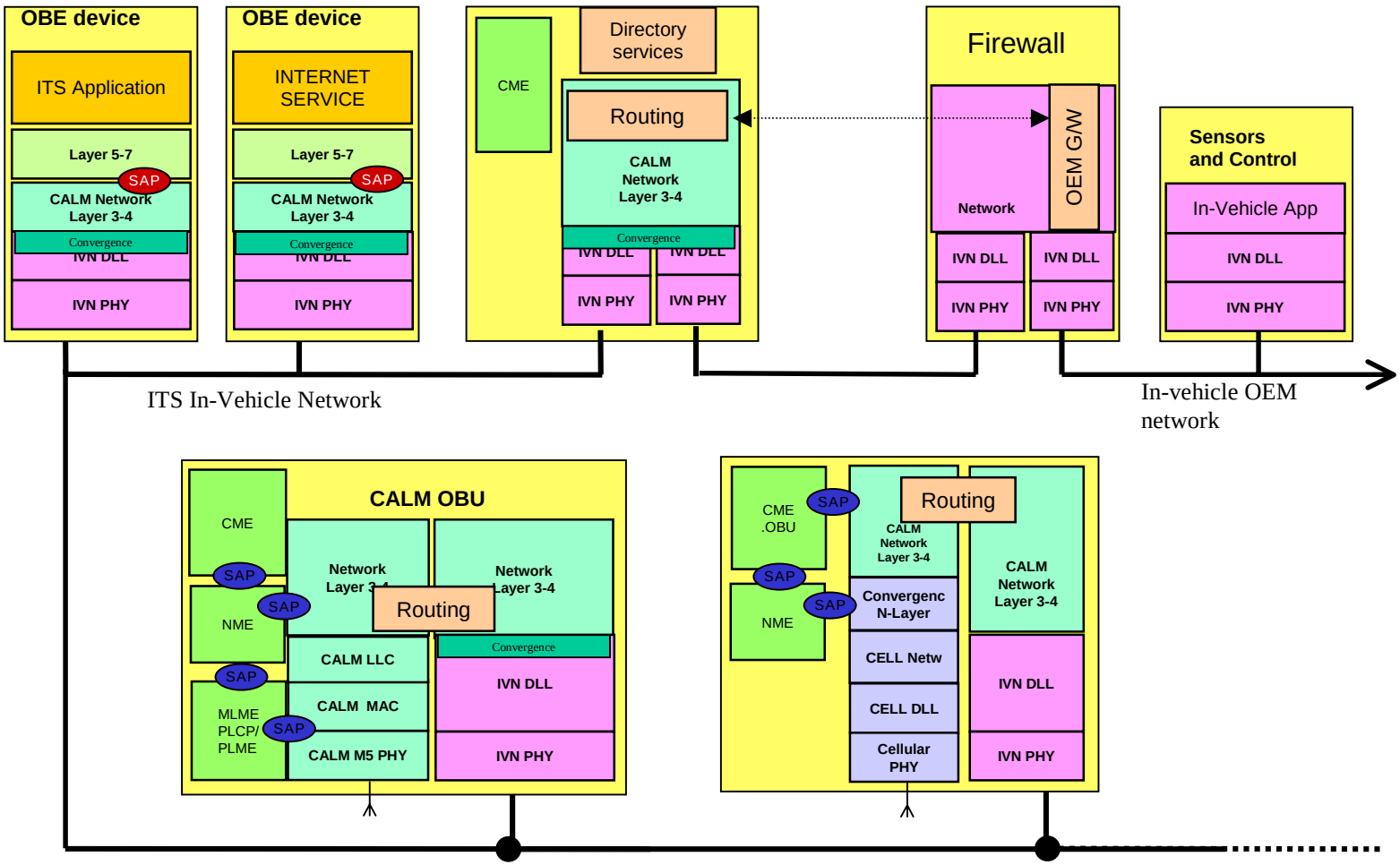

© Consultancy Services International Ltd.

Implementation Architecture - Example

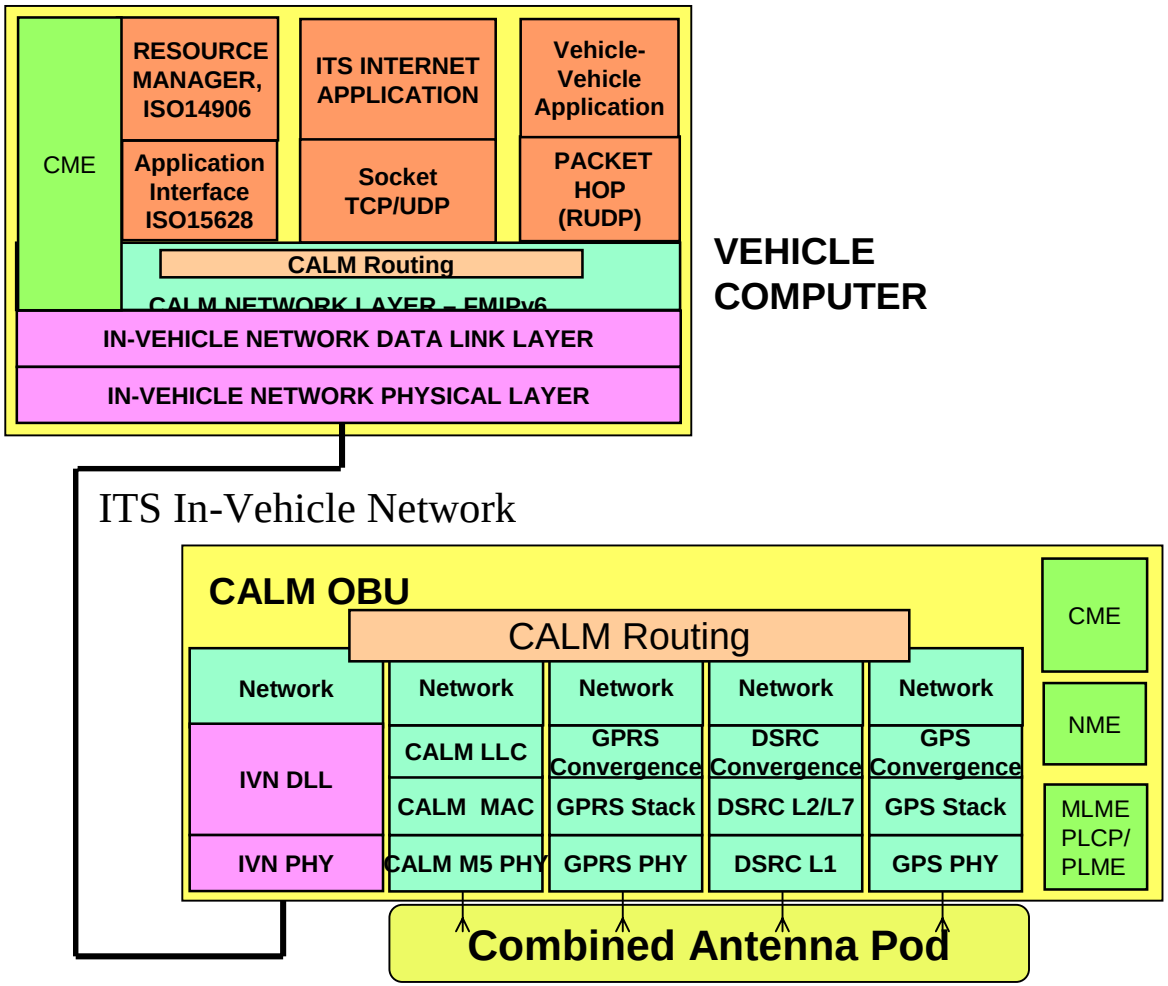

© Consultancy Services International Ltd.

Vehicle - Infrastructure

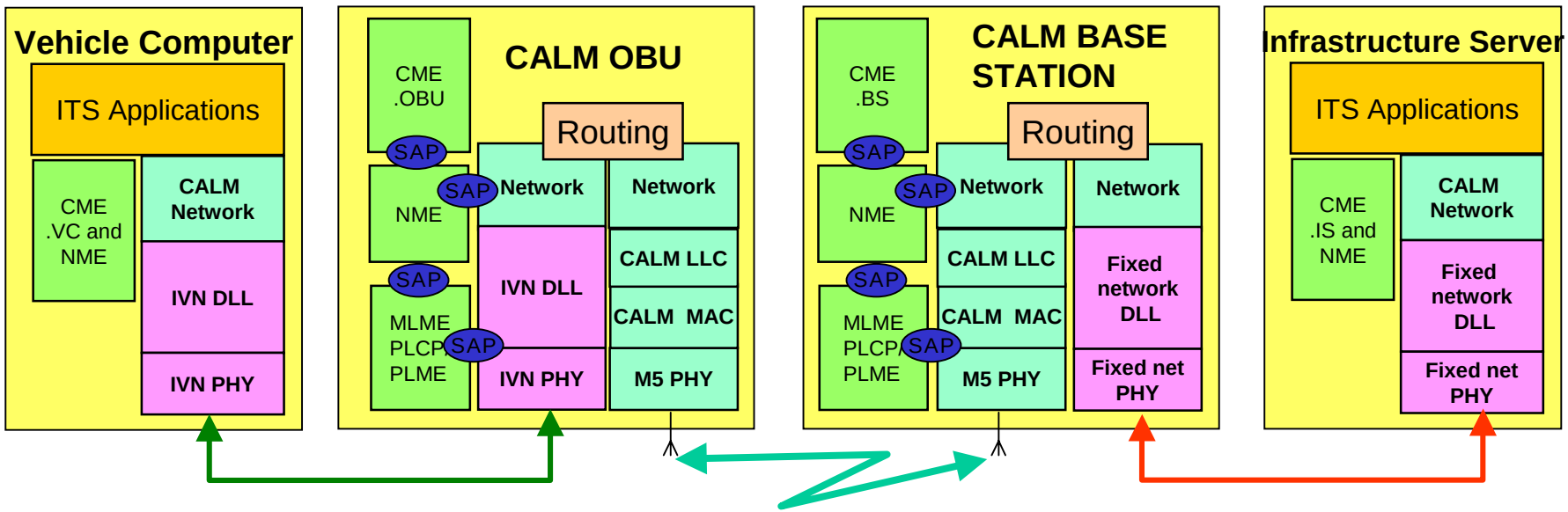

© Consultancy Services International Ltd.

CALM – Restoring Application Sessions –1

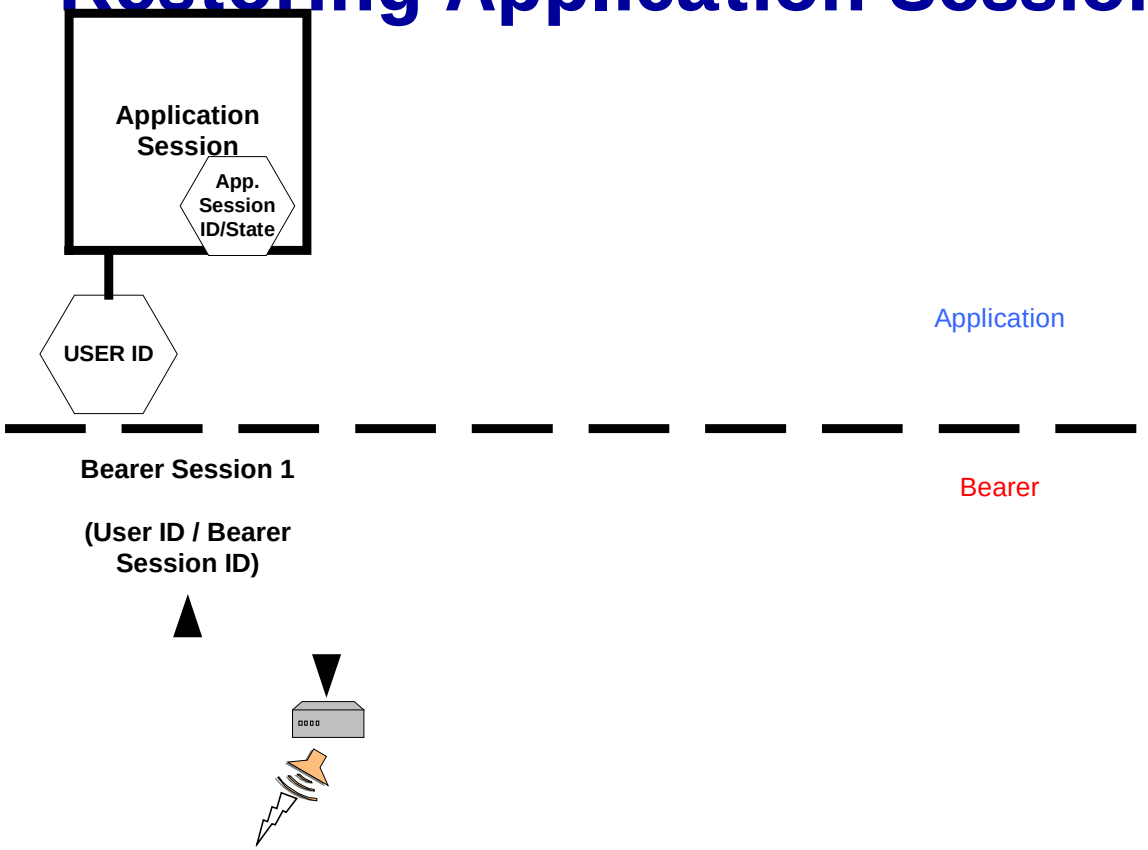

© Consultancy Services International Ltd.

CALM – Restoring Application Sessions –2

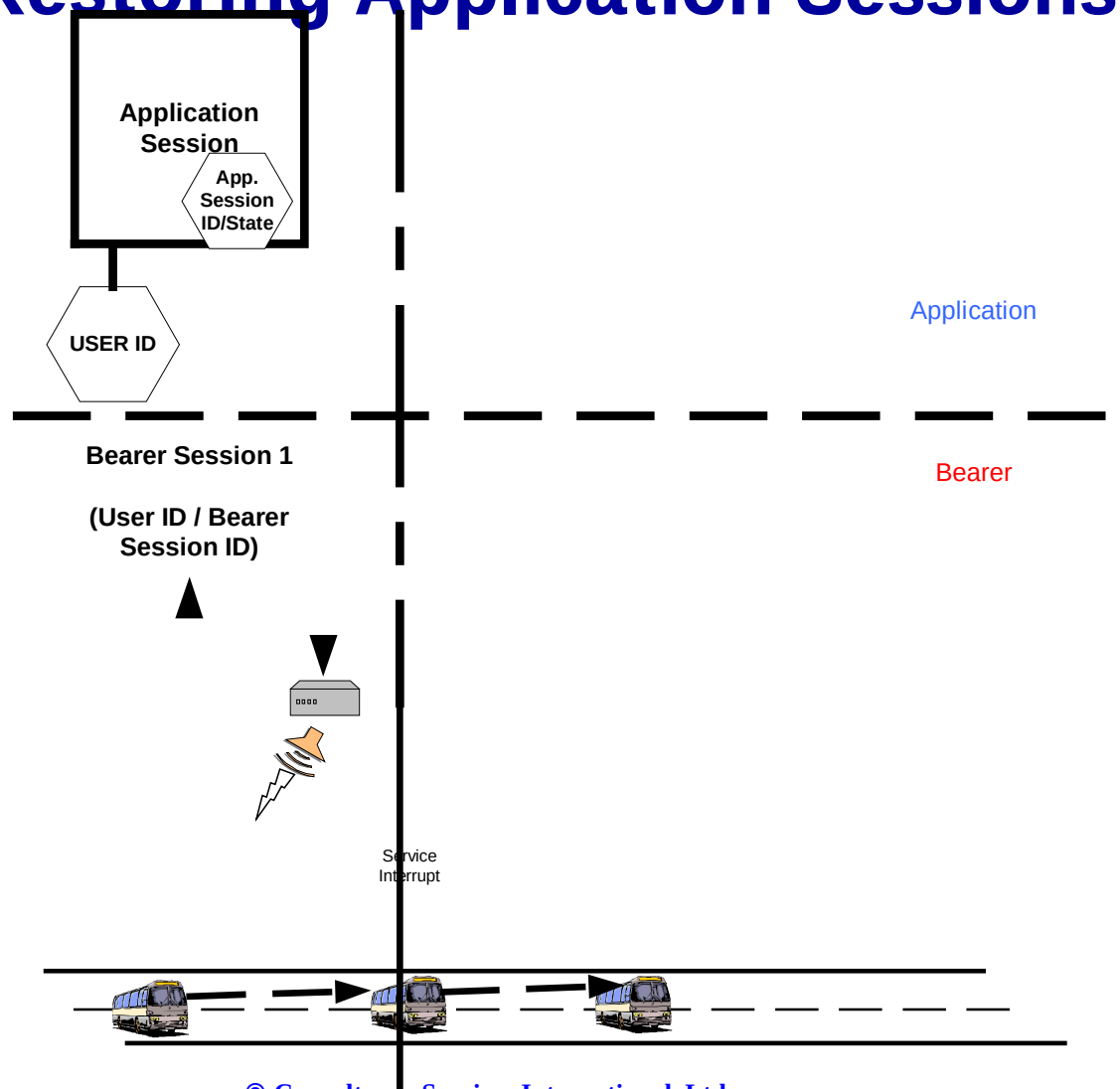

© Consultancy Services International Ltd.

CALM – Restoring Application Sessions –3

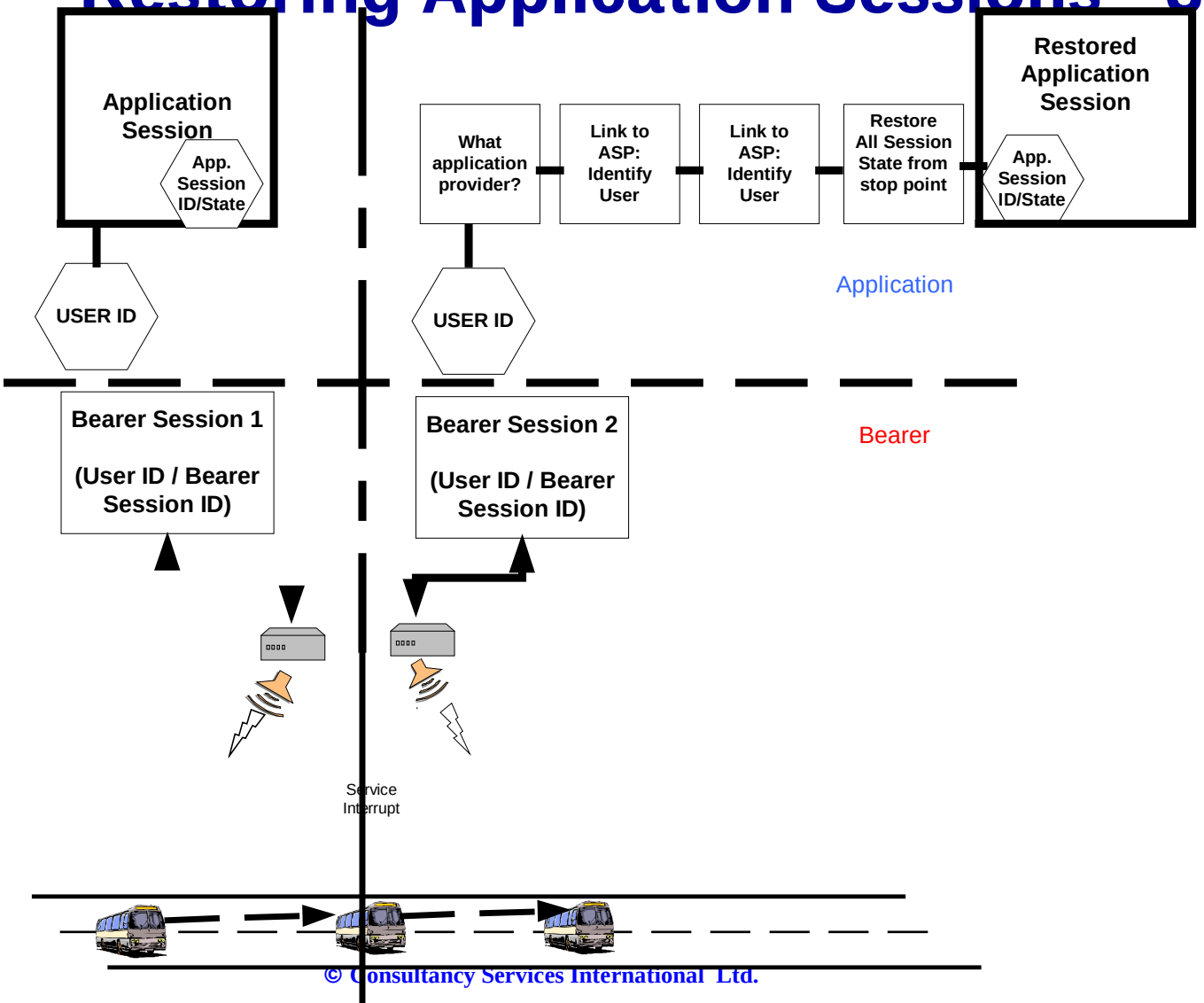

© Consultancy Services International Ltd.

CALM –Standards at PreCompetitive Phase

- By developing the standards now, before there are major ITS deployments of these technologies, we are able to get technical inputs unfettered by commercially compromised strategies.
- As most of the Standards are based on proven Standards (Cellular, IEEE 802-11, IPv6, etc) there is less technical risk in this strategy
- This strategy is designed to provide commercial actors with early opportunity, and operators/users with less risk of supplier dependency or early obsolescence.

© Consultancy Services International Ltd.

IPV6

The means of handover that CALM has chosen is a fast variant of IPv6.

This has the added advantage of easy use of internet in the vehicle

© Consultancy Services International Ltd.

Questions ??

Bob Williams, CSI bw@2-csi.com

© Consultancy Services International Ltd.

This presentation is Copyright of Consultancy Services International Ltd.,

ETSI is authorised to distribute the PDF version of this presentation, or its accompanying paper.

No other distribution is authorised without written consent of CSI Ltd.